Orbital Express
Overview and Lessons Learned

Ms. Melissa Wright

Briefing Prepared for Phoenix Industry Day

2 November 2011

Distribution Statement “A” (Approved for Public Release, Distribution Unlimited)

Orbital Express Summary

- On-orbit satellite servicing demonstration mission
  - Two spacecraft, launched in mated configuration
    - ASTRO servicing satellite, NextSat client satellite
  - March 2007, Atlas V STP-1 launch, 492km 46°
- Program Goals
  - Validate technical feasibility of on-orbit servicing
    - Autonomous Rendezvous, Proximity Operations
    - Grapple and Soft Dock
    - Fuel / Consumable Transfer
    - Modular Electronics Transfer
  - Develop non-proprietary servicing interfaces

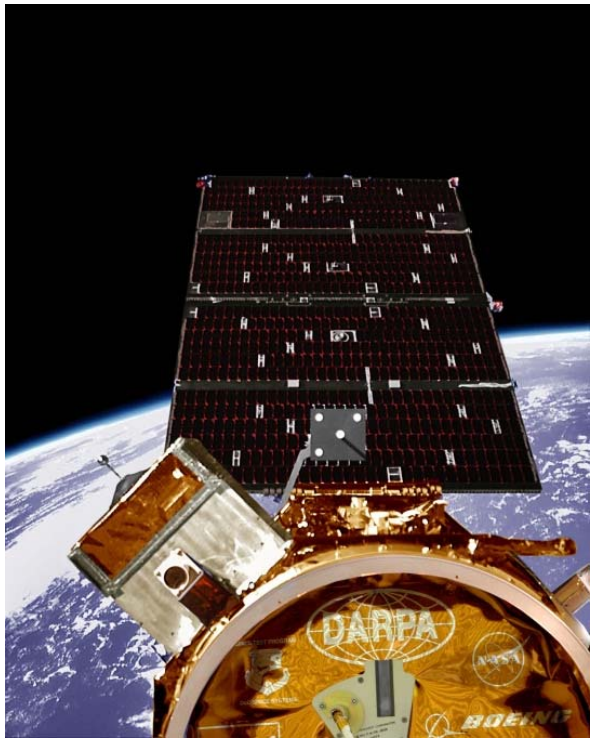

- Conducted varied servicing scenarios, demonstrating flexibility and robustness
  - Range of rendezvous and transfer conditions
  - Autonomous responses to simulated anomalies

- <u>Met 100% of mission success criteria</u>

Distribution Statement "A" (Approved for Public Release, Distribution Unlimited)

On-Orbit Servicing CONOPS

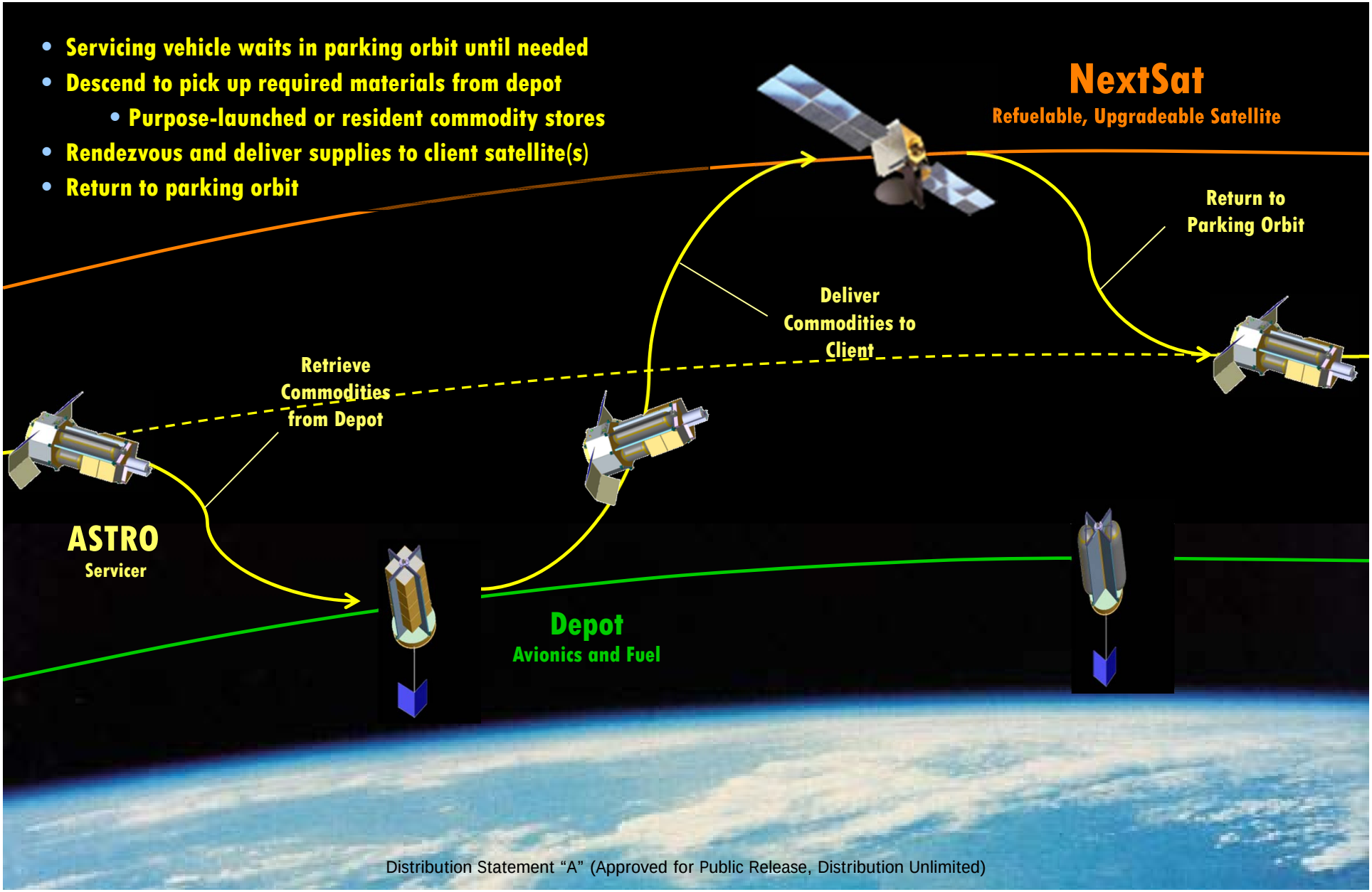

Distribution Statement "A" (Approved for Public Release, Distribution Unlimited)

Demonstration ASTRO Space Vehicle Overview

Spacecraft Processing

- Open architecture and modular design
- RAD hard 750 power PC processor
- 1394 Fire wire plug & play embedded network
- Sun safe mode
- Distributed Telemetry Data Acquisition
- SGLS & TDRSS Command and Control Links

Electrical Power

- Deployable Gimbaled Solar Array(s)
- ~7.1 sq m, 535W Load
- 1200 W (EOL)
- Li-Ion Battery, 2x43 A-hr

Robotic Arm

- MDA arm and end effector
- ORU Transfers using Robotic Arm
- Maximum reach ~3.3 m
- Camera on end effector

Propulsion & Fluid Transfer Accommodations

- 72 kg Mono hydrazine based on TRW heritage
- 37 kg Propellant Xfr Quantity
- ~186 m/sec delta-V unmated, plus 1400 hrs mated
- Capture and propellant transfer mechanisms

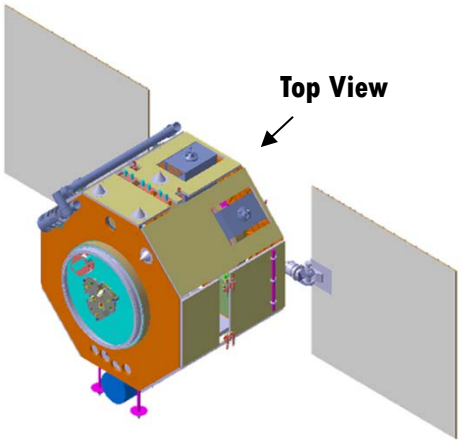

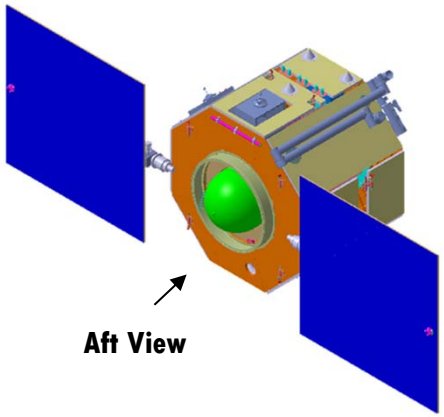

Attitude Determination, Control & Navigation

- Star Camera & GPS Receiver
- Inertial Measurement Unit & Sun Sensors (4X)

Structures & Mechanisms

- Low cost Al honeycomb panel construction w/ central cylinder backbone
- Load and stiffness for mated ASTRO/NextSat launch config.
- Built-in thermal radiators

Communications

- AFSCN SGLS & TDRSS S-Band
- Inter-element Crosslink Subsystem (part of PL Transfer Subsystem)
- Encryption/Decryption

Rendezvous/Prox Ops

- Boeing RPO suites + AVGS sensor (MSFC provided)
- RPO/mission processor, 750 power PC
- RPO/cameras, 3 Vis cameras, IR Camera
- RPO/long range LIDAR

Distribution Statement "A" (Approved for Public Release, Distribution Unlimited)

Launch and Early Orbit

- **Nominal launch from Cape Canaveral at 2210 EST, 8 Mar 07**
  - **Spacecraft separated from Centaur at T+18 min**
  - **Solar arrays deployed, guidance systems initialized upon separation**
- **Early on-orbit anomalies almost ended the mission**
  - **Entered sun-safe mode T+74 min**
  - **ASTRO reached critical depth of discharge, bus shutdown T+22 hrs**
- **Ops team identified problems and implemented workarounds**
  - **Reaction wheel polarity error kept ASTRO from sun-pointing**
  - **Incorrect message information in SIGI ICD kept ASTRO from locating GPS satellites**
- **Initialization and checkout completed without further incident**

Distribution Statement “A” (Approved for Public Release, Distribution Unlimited)

Executed Test Plan

OEDS Test Plan Summary (Rev M)

Test	Rendezvous		Prox Ops						Capture		Unmated				Mated				
Scen	Direction	Max Rng	Flyrnd	Max Rng	Apprch	Snsr	Contin Mnvr	Cmd	Type	Lite	Hr	Min	m/s	kg	Bat	AC3	Fluid	Days	kg
C/O	-	-	-	-	-	-	-	-	-	-	-	-	-	-	0	0	0	5.0	0.5
0	-	-	-	-	-	-	-	-	-	-	-	-	-	-	1	1	9	22.0	0.0
1	-	-	-	-	-	A/V	-	-	-	-	23	40	0.0	0.0	2	~~8~~	4	13.0	4.0
2	-	-	-	10 m	Sol Inrl	A+V	-	XL	Direct	D	0	16	0.4	0.4	0	0	~~2~~	6.0	0.0
3	-	-	-	30 m	Sol Inrl	A+V	-	XL	Fr-Flr	N	1	53	0.6	0.7	2	0	2	4.9	0.0
4	-	-	-	60 m	Sol Inrl	A	-	Grd	Direct	D	1	47	0.7	0.8	0	0	0	3.9	0.0
~~5~~	~~-~~	~~-~~	~~Flyrd 1x~~	~~120 x 60 m~~	~~-R-Bar~~	~~A+V~~	~~-~~	~~XL~~	~~Direct~~	~~D~~	~~5~~	~~58~~	~~1.8~~	~~2.2~~	~~8~~	~~8~~	~~8~~	~~6.7~~	~~8.3~~
6	Behind	1 km	Flyrd 1x	100 x 100 m	Sol Inrl	V	Prox Ab 20-30	XL	Fr-Flr	N	8	9	3.2	3.8	2	0	2	7.7	0.0
~~7~~	~~In Front~~	~~7 km~~	~~Direct~~	~~-~~	~~+V-Bar~~	~~A+V~~	~~-~~	~~XL~~	~~Direct~~	~~D~~	~~23~~	~~42~~	~~5.1~~	~~5.9~~	~~8~~	~~8~~	~~8~~	~~5.8~~	~~8.3~~
8	Behind	7 km	Flyrd 3x	100 x 100 m	Sol Inrl	A+V	4 km Hold	XL	Fr-Flr	N	23	43	3.7	4.0	2	1	5	13.0	0.0
All	20% Uncertainties										-	-	3.0	3.6	-	-		-	1.0
Total Required:					91 Days	27.5 kg Fuel		19%		3	17	8	18.5	21.4	9	2	24	87	6.1
Total Propellant Available:						144 kg Fuel (FTAPS Usable)													

- No battle plan survives contact with the enemy
- Technical difficulties and schedule pressures forced some adjustments
  - Scenario 0 – deferred flight computer demonstration until later
    - Did not want to risk loss of AC3 availability
  - Scenario 1 – skipped fluid transfers due to command verification error
    - Allowed time to resolve issue before next planned transfers
  - Scenario 3 – executed nominally, until computer reset during approach
    - Ultimately resulted in separation to 6km, replanned approach to be +V-Bar, using AVGS, direct capture in daylight
  - Scenarios 4 & 6 – cancelled, most characteristics already captured by #3
  - Scenario 7 – adjusted to capture key aspects from #6
    - 4km separation, 100x100m flyaround, solar inertial approach, nighttime free-flyer capture
  - Scenario 8 – single fluid transfer, vs. planned 5
    - Schedule pressure, had already met all success criteria
- Even with changes, demonstration met 100% of mission success criteria

Distribution Statement "A" (Approved for Public Release, Distribution Unlimited)

Demonstrated Flexibility

- Rendezvous
  - Multiple rendezvous from a range of distances and directions
  - Space background vs. earth background target tracking
  - AVGS laser proximity ops sensor vs. VisStar visual nav algorithms
  - R-bar vs. V-bar rendezvous approaches
  - Solar inertial vs. LVLH target vehicle pointing
  - Direct approach vs. hold points vs. circumnavigation
  - Direct capture vs. robotic grapple and capture
- Fluid transfer
  - Hydrazine propellant, transferred between vehicles, also used in ASTRO propulsion system
  - Multiple fluid coupler mates & demates, bidirectional transfers
  - Pump-fed vs. Pressure-fed
  - Range of flow rates, fill fractions, quantities
  - Flow sensor vs. timed control vs. pressure control
- ORU Transfer
  - ORUs grappled with robotic arm using visual targets for alignment, unlatched, removed, translated/rotated, inserted, and latched
  - Battery repeatedly transferred between ASTRO and NextSat, demonstrated charge and discharge on both vehicles
  - Flight computer removed & replaced on ASTRO, used to manage sensors for select unmated ops

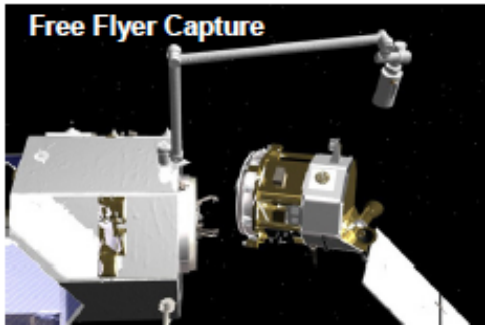

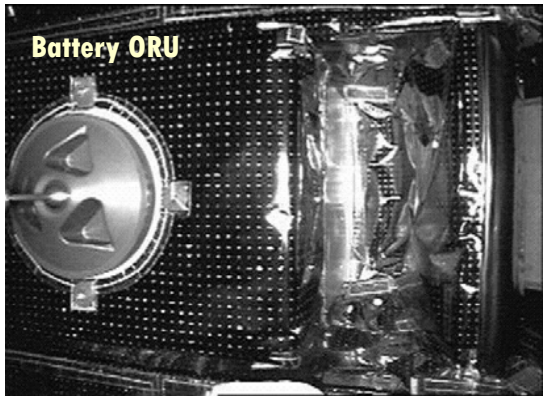

Distribution Statement "A" (Approved for Public Release, Distribution Unlimited)

10-meter rendezvous/capture

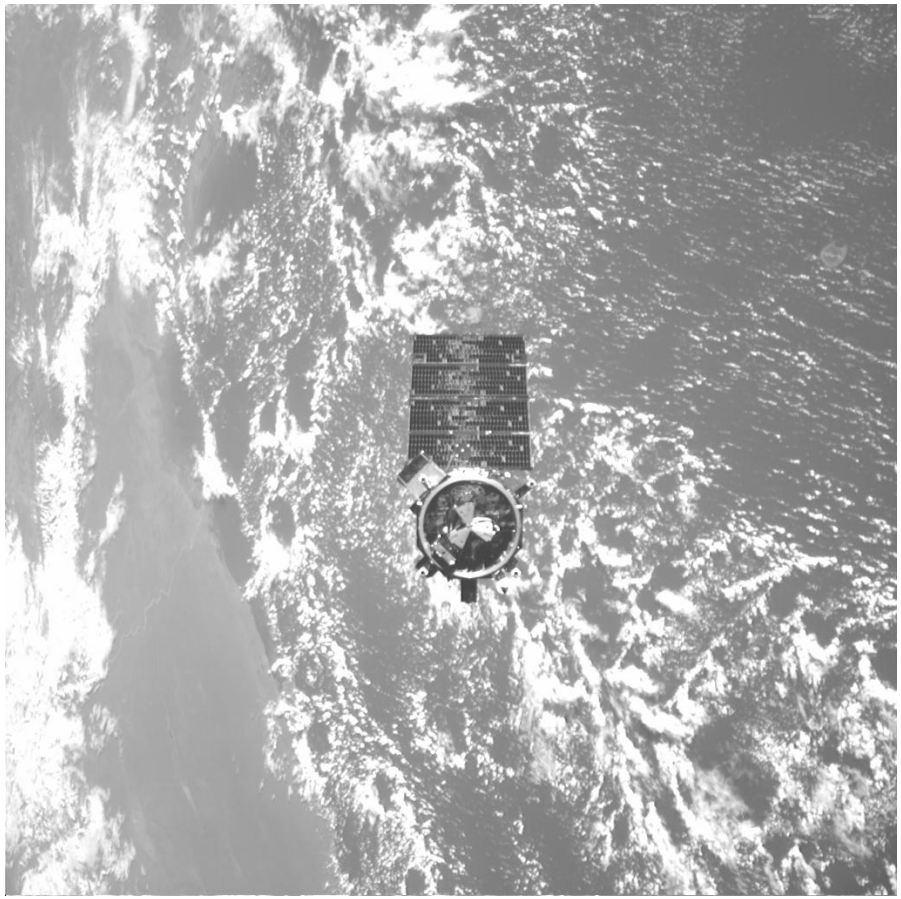

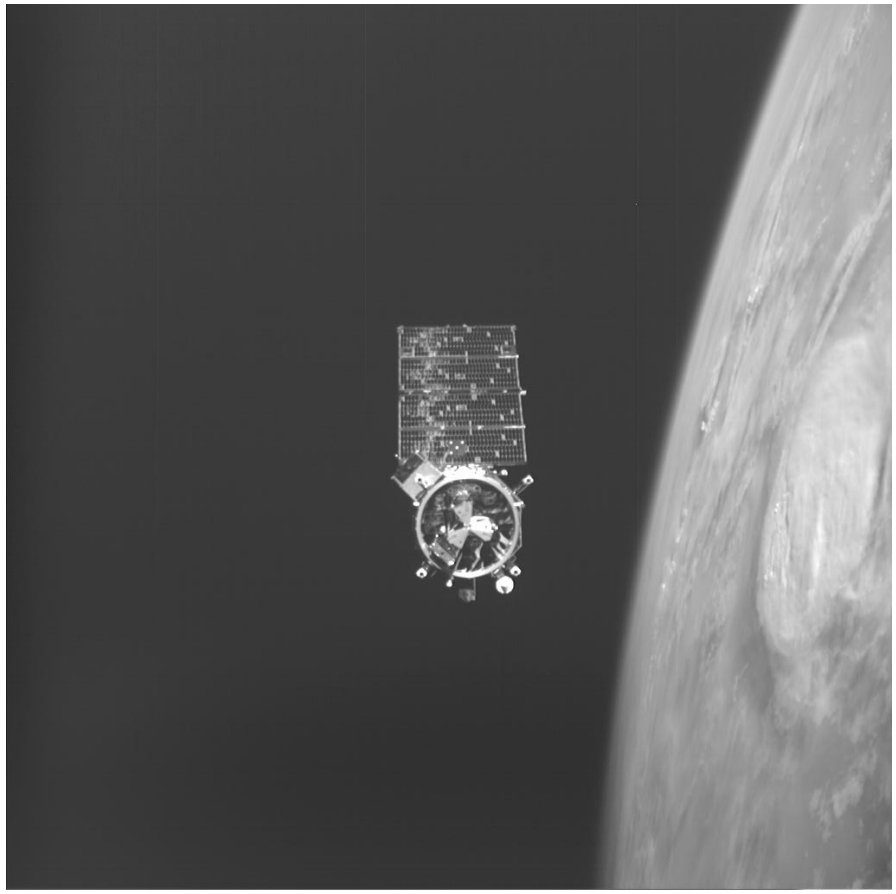

Fully successful

Distribution Statement “A” (Approved for Public Release, Distribution Unlimited)

Key Lessons Learned

- Test, test, test
  - Most on-orbit anomalies can be avoided with a sufficiently rigorous and representative ground test program
  - Cost and schedule limitations – have to choose tests judiciously
- Don't neglect the ground
  - Ops and ground hardware for a complex, dynamic multi-vehicle system are non-trivial
  - If using an external facility, ensure adequate leverage and control to manage cost, schedule & technical issues
- Plan for aborts and contingencies
  - Only one scenario required an abort during unmated ops, but that abort consumed a large chunk of ops time and resources at the expense of other planned activities
- Pay attention to interfaces
  - Selection of multiple contractors forced rigorous interface documentation and tooling to ensure compatibility
- Manage requirements changes
  - Changes to launch vehicle, propellant tank, additional risk reduction activities increased costs and schedule.

Distribution Statement "A" (Approved for Public Release, Distribution Unlimited)

Technical Issues & Lessons Learned

- Check and double-check polarity.
  - A minus sign in the wrong place is a common and potentially mission-ending error.
  - ASTRO pitch wheel polarity disconnect between hardware and software almost ended the mission in the first day.
- "Nav is really important."
  - Have diverse and redundant means to determine absolute and relative position during prox ops. Onboard, co-orbital, ground-based.
  - Autonomous abort to safe distance during S3 anomaly failed because lost relative position knowledge after computer reset
  - Simplistic orbit propagator for target built up errors during extended lack of sensor contact
  - Ground-commanded abort during S3 anomaly led to excessively large burn, because computer reset had lost knowledge of accumulated accelerometer bias
  - AVGS "spot mode" could have helped with angles-only data, but was not enabled
- Navigation filter underestimated its uncertainty, led to faulty tracks
  - At times, locked onto optical artifacts and refused to acknowledge new sensor data of actual target.
- Full system on-orbit checkout and sensor calibration.
  - Ground testing can never capture full gamut of on-orbit conditions
  - Optical artifacts not discovered until re-run of sensor calibration after S3 anomaly

Distribution Statement "A" (Approved for Public Release, Distribution Unlimited)

Technical Issues & Lessons (cont)

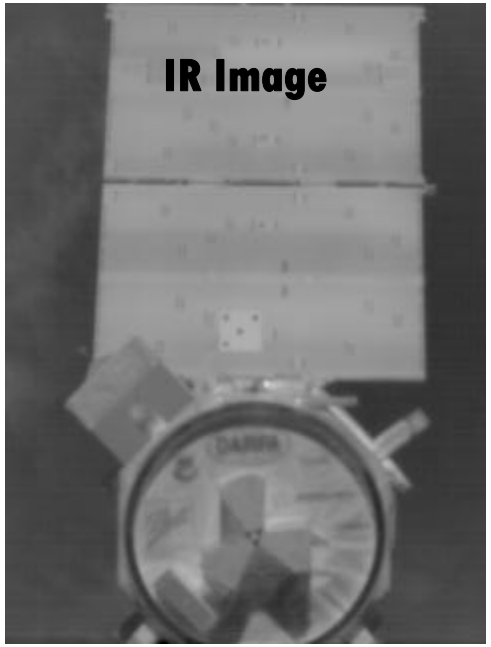

- R-Bar and V-Bar approaches stress thruster duty cycle limits, lead to overtemps.
  - Unnatural motion requires frequent burns on specific thrusters.
- Infrared sensors were extremely useful.
  - More reliable under a wider range of on-orbit lighting & thermal conditions.
- Situational awareness is critical.
  - Carry independent sensors or have an independent source incorporated in contingency plans.
  - Situational awareness imagery was critical to troubleshooting
- Ground simulation of ALL uplink commands is essential and should be a flight rule
  - Commanded abort without simulation of computer reset conditions could have resulted in collision
- Telemetry plan for time-sensitive contingencies
  - Due to limited comm or ground processing, may not have quick access to stored SOH
  - TDRSS link provided invaluable supplementary comm coverage
- Limit autonomy during contingency response, always have a ground override
  - Autonomous responses should be limited to safing the vehicle in conditions where the ground can't intervene in a timely fashion.

Distribution Statement "A" (Approved for Public Release, Distribution Unlimited)

Programmatic Lessons Learned

- Benefits of Alpha Contracting
  - Traditional change proposal process was extremely lengthy and expensive, multiple iterations and negotiations
  - Alpha Contracting approach – small team of DARPA technical, costing & contracting experts traveled to contractor, wrote the change proposal together
  - Real-time evaluation & negotiations led to substantial cost avoidance
- On-Site Program Office Support
  - During periods of high activity and for critical events, on-site program office reps can rapidly escalate and resolve any problems
  - Placing reps at prime contractor, launch site, ops center resulted in improved communications, improved working relationships, more proactive resolution of issues
- Independent Cost Estimate (ICE)
  - Orbital Express Phase II cost ended up approximately 3x the planned funding
    - Cost growth by hardware and integration contractors
    - Repeated launch vehicle changes
    - Added risk reduction activities – upgraded parts, added testing
    - Parts problems requiring reorder & rework (industry-wide FPGA issue)
  - A detailed ICE performed before Phase II might have identified the disconnect between the program objectives and the available funding

Distribution Statement “A” (Approved for Public Release, Distribution Unlimited)

Transition Lessons Learned

Though efforts were initiated early, lack of successful transition provided important insights:

- Build a broad base of support, include as many players as possible
  - Transition is personality driven. If the advocate for your program moves on to another position, there's no guarantee their replacement will feel the same.
- Government budget cycles require long lead time
  - Customers want to see it work before they commit, but by the time it's working, it's too late to program it into their near term budget
- Plan for residual capability after the demonstration
  - Build a system with operational utility, for transition partners to take over when the demo is complete. To that end, put it in a useful orbit with useful capabilities and interfaces.
- Technical feasibility isn't enough – operational users are risk-averse
  - *Before launch:* Additional servicing hardware adds complexity, which adds technical, cost and schedule risk to the program.
  - *After Launch:* Need more than a few controlled scenarios to demonstrate reliability before a user will let you approach their high-value asset
  - *Solution:* Initially, use existing interfaces (e.g. grapple the launch interface ring, refuel through fill & drain valves) and only service vehicles nearing the end of their operational life
- If you build it, they will come – eventually
  - Until a servicing capability exists, users won't design for it. Once they start designing for it, it will be years before those vehicles are in orbit.
  - A service provider must have funding and a business model which allows for low utilization during early years

Distribution Statement "A" (Approved for Public Release, Distribution Unlimited)

Orbital Express On-Orbit

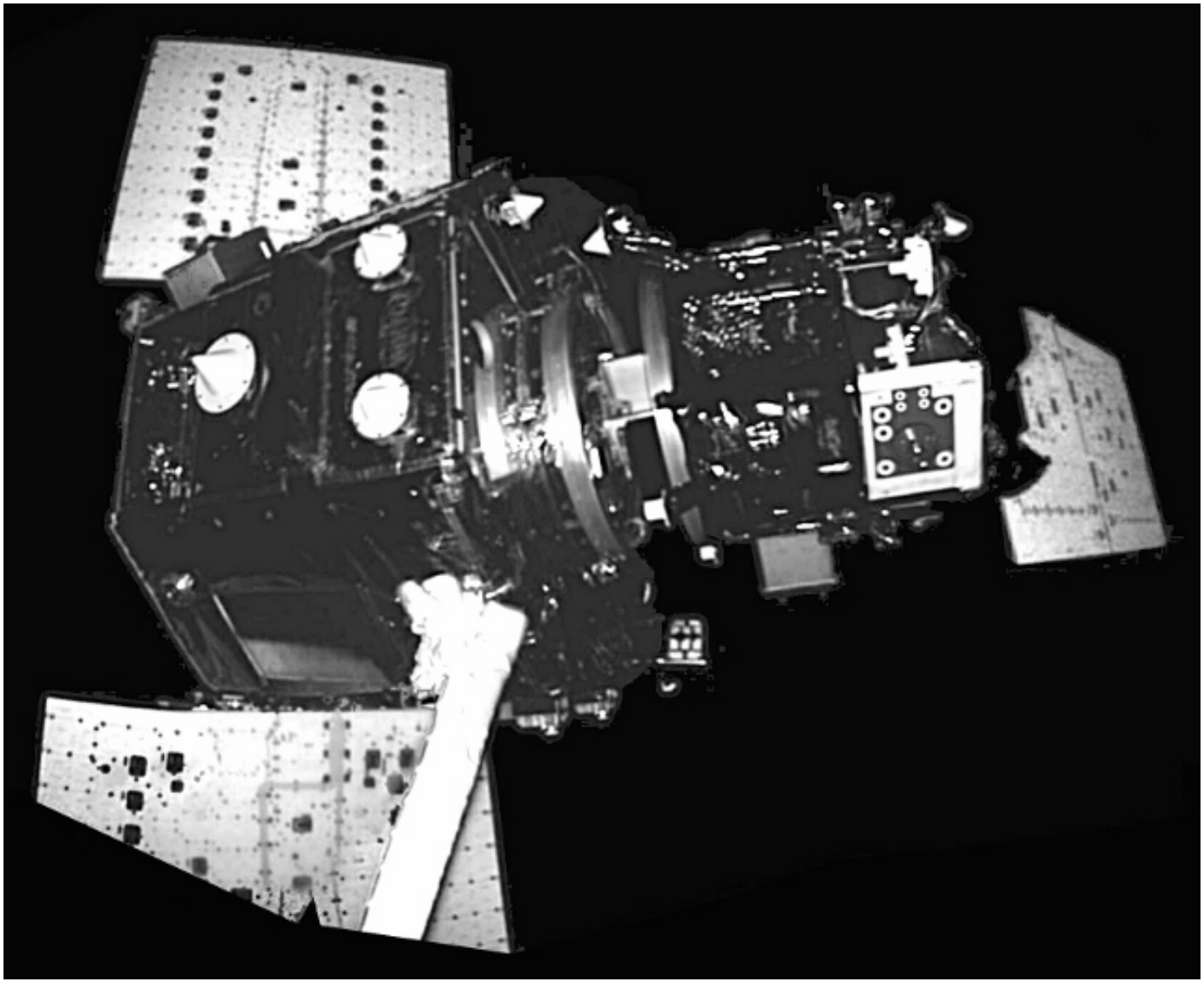

Distribution Statement “A” (Approved for Public Release, Distribution Unlimited)

www.darpa.mil