Orbital Express Capture System: concept to reality

Shane Stamm[a], Pejmun Motaghedi[b]
[a]Starsys Research Corporation, Boulder, CO
[b]The Boeing Company, Huntington Beach, CA

ABSTRACT

The development of autonomous servicing of on-orbit spacecraft has been a sought after objective for many years. A critical component of on-orbit servicing involves the ability to successfully capture, institute mate, and perform electrical and fluid transfers autonomously. As part of a Small Business Innovative Research (SBIR) grant, Starsys Research Corporation (SRC) began developing such a system. Phase I of the grant started in 1999, with initial work focusing on simultaneously defining the parameters associated with successful docking while designing to those parameters. Despite the challenge of working without specific requirements, SRC completed development of a prototype design in 2000. Throughout the following year, testing was conducted on the prototype to characterize its performance.

Having successfully completed work on the prototype, SRC began a Phase II SBIR effort in mid-2001. The focus of the second phase was a commercialization effort designed to augment the prototype model into a more flight-like design. The technical requirements, however, still needed clear definition for the design to progress. The advent of the Orbital Express (OE) program provided much of that definition.

While still in the proposal stages of the OE program, SRC began tailoring prototype redesign efforts to the OE program requirements. A primary challenge involved striking a balance between addressing the technical requirements of OE while designing within the scope of the SBIR. Upon award of the OE contract, the Phase II SBIR design had been fully developed. This new design, designated the Mechanical Docking System (MDS), successfully incorporated many of the requirements of the OE program.

SRC is now completing dynamic testing on the MDS hardware, with a parallel effort of developing a flight design for OE. As testing on the MDS progresses, the design path that was once common to both the SBIR effort and the OE program begins to diverge. The MDS will complete the scope of the Phase II SBIR work, while the new mechanism, the Orbital Express Capture System, will emerge as a flight-qualified design for the Orbital Express program.

Keywords: Orbital Express, capture system, soft docking

1. INTRODUCTION

Over the past decade there has been a push to develop the capability of autonomous servicing of orbiting spacecraft. While servicing capability has been available through the Space Transportation System, or Shuttle, high cost has limited its use to very expensive systems within the Shuttle's orbital reach, notably the Hubble Space Telescope. Therefore, the practical need exists for current and emerging spacecraft servicing. The reasons are compelling:

- To extend the life of spacecraft due to propellant depletion
- To replace components that are obsolete or have failed
- To capture spacecraft and move them to more effective orbits
- To recover a spacecraft with a failed deployment by manually deploying
- To examine spacecraft to determine cause of failure

The Orbital Express program is working to develop a cost-effective standard architecture for autonomous servicing. Crucial to this architecture is the effective means by which to capture, provide secure mechanical connection, and make fluid and electrical connections between two spacecraft. The effort involved in such a mission presents an outstanding mechanisms challenge. As a key member of the OE team, Starsys Research Corporation is working to design such a system.

2. PROTOTYPE DOCKING MECHANISM

Beginning in 1999, SRC undertook a design effort to develop autonomous soft docking. The project began with a Phase I SBIR grant from AFRL, who provided bounding conditions to the problem that included an estimated spacecraft size and mass (a cylinder, 50cm OD x 130cm L, 50 kg) and a requirement to dock two small microsat spacecraft and transfer fluid and/or electrical data between them. Yet, definition of the various needs that might arise when servicing obsolete or exhausted spacecraft had to be formulated. A key challenge became one of both establishing concept requirements as well as designing to address those requirements.

Evaluation of existing designs revealed a myriad of related technology. Most available technology related to extra-vehicular activity (EVA) interfaces, robotic boom end-effector configurations, or impact docking mechanisms. Much of this technology, by nature, required manned intervention. Most of these systems were primarily intended for large spacecraft and impact docking applications, and were not well suited for the more precise requirements of autonomous soft docking and alignment of fluid and electrical couplings.

A critical component in identifying design requirements involved defining the eventual use and application of the intended mechanical docking system. Further research did not yield any definitive mission scenarios, but did present general ideas regarding potential applications. Two mission scenarios were conceived:

1. Client (on-orbit spacecraft needing service) / microsat (spacecraft servicing the Client): A microsat could be launched on an as-needed basis to directly service an orbiting client. This provided a workable model for technology upgrades, refueling and repairs.
2. Various client satellites and a microsat base station (both on-orbit): The client calls on the microsat base as needed, providing a good scenario for common repairs or refueling need.

2.1. Prototype trade studies

In a parallel effort, the design team traded many different methods of joining, grappling, and aligning. As a result, four different concepts were evaluated:

1. “Harpoon”
2. A telescoping probe
3. Impact docking with a large conical guide
4. “Claw-type” linkages interfacing with a trefoil

The harpoon configuration, in which a probe is launched at a target, latches on, and is reeled back into guide features, seemed unpredictable and presented complications concerning the alignment of fluid and electrical couplings. A telescoping probe, where a telescoping pole extends to the mating spacecraft, engages a target feature, and retracts to join the two, turned into a complicated multi-mechanism apparatus not well suited for the direction and vision taking form. Impact docking was eliminated as an option because soft docking seemed safer for the two spacecraft and better suited to precisely align fluid and electrical couplings and prevent potential damage of components.

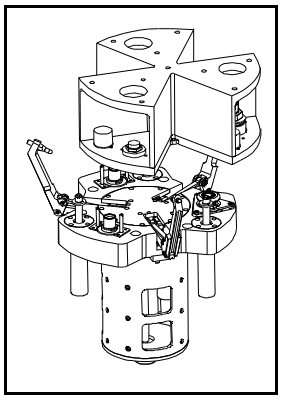

Figure 1: SRC grappling concept

After extensive evaluation, SRC selected a three arm grapple design (Figure 1). The design would consist of two main subassemblies: an active mechanism and a passive structure. The active mechanism would consist of a motor driven lead screw that would actuate three individual linkages. The linkages would engage the passive structure, whose geometry would allow it to be constrained by the linkages. Further retraction of the linkages would seat the passive structure into a three point kinematic mount, establishing a rigid interface. Release of the structure would be achieved by reversing these steps, with separation velocity provided by the spring loaded kinematic mounts.

Construction on the prototype developed under the Phase I SBIR was completed in the early part of 2000. Figure 2 shows a picture of the completed design.

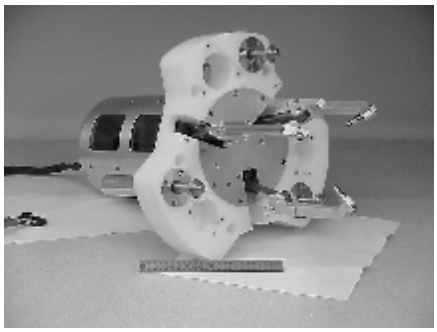

Figure 2: SRC prototype

2.2. Prototype testing

Beginning in early 2000, SRC began extensive testing on the prototype hardware in order to evaluate its effectiveness and limitations. The test program included three significant components.

1. In-house off-load testing: An off-load fixture was designed and manufactured to assist in understanding various dynamics of docking as well as to prove system ability to dock and transfer cryogenic fluids (LN_2).
2. Micro-gravity flight: A test plan was developed and executed to test the prototype in a micro-gravity environment.

2.2.1. In-house off-load testing

In order to gain a general understanding of the docking system dynamics, a test was constructed using a simulated inertia mass and cable/pulley system. Figure 3 shows the system with the prototype mounted in the lower left hand corner. The passive side was mounted to an adjustable tip/tilt fixture allowing tests to be performed in various misalignment configurations. Adjustment of the cable attachment point (universal joint) and offload weights provided an approximation of a zero-g environment. This test setup was used for the following tests:

- Mating and de-mating of the interface under various alignment scenarios and capture ranges to verify docking capability
- Electrical and fluid coupler mating and de-mating verification

Continuity checks were performed on the electrical couplers while the docking interface was mated and following each mate/de-mate cycle. The fluid coupler performance was verified by performing liquid nitrogen transfer tests on the mated coupler. During development over 200 mechanical mate/de-mate cycles were successfully completed.

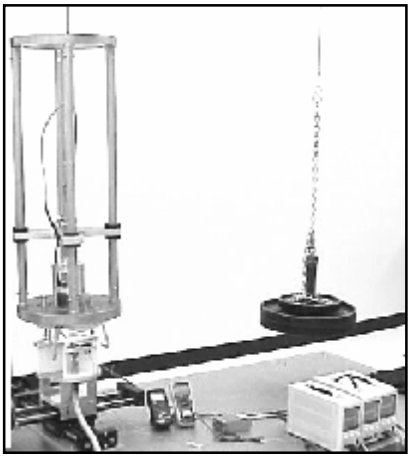

Figure 3: Off-load setup

2.2.2. Micro-gravity testing

The second component of testing included a flight on NASA's modified KC-135 aircraft, nicknamed the "Vomit Comet", flown from Ellington Field near Johnson Spaceflight Center (JSC), Houston (Figure 4). Tests were performed during a series of parabolic aircraft maneuvers (3-4 sets of 10-12 parabolas). Approximately 25 seconds of micro-gravity, followed by 30 seconds of 2-g at pull-up, were experienced within each parabola. The experiments focused on the grappling and capture events that could be accomplished within the 25 second micro-g window. The experiment was designed to have two separate, free-floating simulators that represent the relative mass and inertia of a client and a servicing satellite (approximately 2:1, client to servicing). The active and passive halves of the prototypes were each mounted to their respective mass/inertia simulator. With JSC crew assistance, the two halves were positioned within capture range. The active docking mechanism was immediately powered in an attempt to demonstrate "zero" gravity docking. Because of the limited time in micro-gravity, consecutive phases of the docking sequence were performed throughout a series of parabolas.

Figure 4: Micro-g flight

Despite these limitations, the micro-gravity tests proved instrumental in demonstrating the mechanism behavior. There were concerns early on that the relatively small impact forces associated with docking in "zero" gravity would cause the spacecraft to move out of capture range as they reacted against one another during the docking phase. Of primary importance was the observation that the mechanism did not exhibit this behavior during the testing. Sufficient compliance in the linkages prevented the passive half from a "rebound" effect. However, it was observed that collision with the spring loaded kinematic mounts did result in some degree of rebound. Furthermore, a mode of oscillation during the retraction phase was exhibited and would need to be addressed in subsequent work.

3. COMMERCIALIZATION OPPORTUNITIES

The OE program is developing an industry-wide standard architecture to perform cost effective autonomous satellite servicing. In order to demonstrate the technology, OE plans to use two spacecraft: the client vehicle, referred to as NEXTSat, and the servicing vehicle, referred to as ASTRO. An illustration of the OE vehicles is shown in Figure 5. The demonstration mission plans to launch both vehicles together and perform a series of mating and servicing operations on-orbit. The demonstration will exhibit four critical technologies:

1. Standard satellite servicing interfaces
2. Autonomous guidance, navigation, and control
3. Autonomous rendezvous, proximity operations, and capture
4. Fluid and orbital replacement unit (ORU) transfer

3.1. Orbital Express and the Phase II SBIR

A major criterion for mission success is the reliability of the capture system. SRC already had developed and tested a functional prototype, and the capture requirements were well suited to the SRC design. For instance, one of the primary issues identified during the prototype design was the need for spacecraft manufacturers to integrate a

common interface to interact with a servicing spacecraft. It was clear that a simple passive structure, designed to mount as a standard interface on all spacecraft, could be developed to work with a more complex docking mechanism mounted to the servicing spacecraft. The SRC prototype had already been developed on the basis of providing a passive interface in order for the servicing vehicle to perform operations without help from the client vehicle.

While the opportunity OE presented was indeed mutually beneficial, it was not without its own set of challenges. OE was still in the proposal stage and the design of the MDS was proceeding under AFRL funding. It therefore became necessary to balance the design objectives within the practical limits of the SBIR scope. At the onset of the MDS design effort, SRC worked closely with Boeing, who was providing much of the initial insight into the technical requirements. Inherent to the program was the necessity for the design features to be incorporated into the basic concept. Early on, many of these requirements had not been evaluated for scope or feasibility, and were still in the process of refinement. Others were very loosely defined or not defined at all. Therefore, SRC took on the challenge of not only addressing these requirements, but also defining the feasibility and practical dimensions of the design.

The effort toward commercialization involved the need for technical requirements and definition. In the initial evaluation phase it became evident that in order to suit the program requirements of OE, the design effort would need to address four major areas of implementation:

1. Mechanism capture capability
2. Mechanism structural capacity
3. Push-off rods
4. Roller flexure

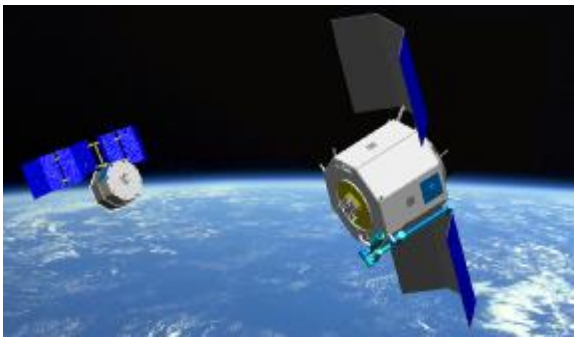

Figure 5: Orbital Express vehicles

3.2. Mechanism capture capability

During the prototype design, a clear definition regarding the capture capability envelope did not exist. The prototype capability was not sufficient to meet the requirements of the OE program. Therefore, the capture capability would need to increase in order to accommodate the precision of the guidance and navigation controls. One of the key features of the prototype work was the development of a scalable technology, applicable to a wide range of spacecraft and payload capacities. It was appropriate to pursue this objective in a manner that maintained the integrity of the original design. The required capture capability would be achieved from a scale change, with minimum impact to the mechanism configuration.

3.3. Mechanism structural capacity

The prototype had been developed for use with a microsat, and its structural capability was not suited for large vehicle payloads. In a manner similar to capture capability, structural capacity would have to be addressed without changing the original concept. Thought was given to refining the load paths in order to handle the increased strength and stiffness requirements. The drive train also needed to be enhanced in order to achieve the necessary mated interface stiffness. As a starting point, it was decided that the capacity would be designed to accommodate the largest operational vehicle payloads encompassed in the scope of the OE program.

3.4. Push-off rods

Push-off rods with a damping mechanism were included. Testing of the prototype, along with computer simulation, prompted the desirability for passive damping. During the retraction phase of capture, oscillations had been observed between the passive structure and the grappling linkages. It was believed that damping would help reduce the forces developed in the system during retraction. Also, some form of energy dissipation was necessary to reduce any impact between the two spacecraft immediately preceding a capture event.

3.5. Roller flexure

Significant internal mechanism loads can develop during the process of capture and alignment. Dynamic modeling and analysis determined that a low stiffness path of the capturing arms reduced loads encountered by the arms dramatically. The solution was to add a flexure with low stiffness at the arm reaction point.

4. MECHANICAL DOCKING SYSTEM (MDS)

The prototype established a working baseline with which to begin development. The partnership with OE had provided enough definition to help launch the effort. SRC began its work on the second phase. While the prototype work had produced a proof of concept mechanism, the scale of the design was not suitable to handle either the payloads or the capture envelope of the OE program. Therefore, the first step in the redesign effort involved the evaluation of the present geometry. It was determined that, in order to suit the OE program, the existing geometry would need to be scaled approximately double the size of the prototype.

The depth of the rescaling effort did not become fully apparent until a detailed evaluation was undertaken. The complexity of the design was such that changes to one aspect greatly impacted all other aspects. As a result, multiple iterations were performed. Modifications were not limited to the grappling linkages themselves, but to the housing and passive structure as well. The entire drive train and kinematic mount system also needed to be redesigned in order to handle the increased vehicle payloads.

From a functional standpoint, the design that emerged looked very much like a scaled-up version of the original hardware. The design had nearly doubled with respect to the prototype. However, the design had not only grown in size, but had matured in complexity to accommodate its enhanced capabilities, both internally and externally. Figure 6 displays the newly redesigned hardware, officially designated MDS. The requirements that encompassed the design effort are displayed in Table 1 below.

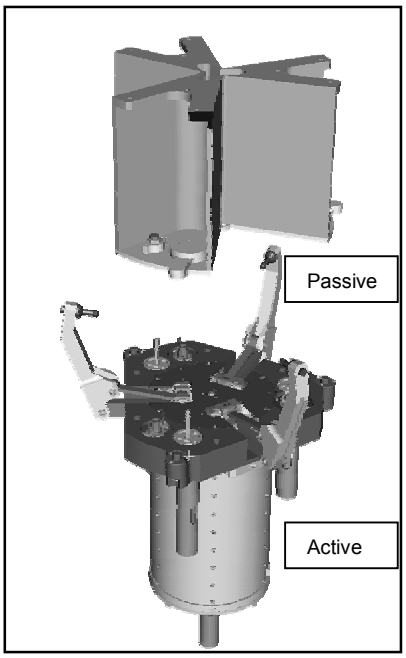

Figure 6: MDS

Table 1: MDS Phase II Design Requirements

Parameter	Value
Axial Capture Distance:	6 inches
Angular Capture Misalignment Tolerance Pitch/Yaw Roll	 +/-5 degrees +/-5 degrees
Lateral Misalignment Tolerance*:	+/- 2 inches
Linear Contact Velocity Tolerance*:	3 cm/s
Preload:	2500 lbf
Capture Time:	< 10 s
Capture and Latch Time:	< 240 s
Interface Outer Diameter:	< 18 inches
Active Mass:	< 50 lbs
Passive Mass	< 25 lbs

4.1. MDS TESTING

4.1.1. In-house testing

SRC completed all in-house testing that will further the parallel efforts of the OE flight unit design. In house testing included stiffness characterization, off-load testing, and mated interface load. All tests performed proved the MDS unit design accomplished the main goals of the program.

4.1.2. Computer simulation

Latch arm stiffness measurement was one of the several tasks undertaken on the MDS hardware. The lateral and radial stiffness of the linkage assemblies had been measured in both the deployed and captured position. By considering these measured stiffness values together with analysis of dynamic simulation results, more confident results and conclusions were produced. Dynamic Analysis and Design System (DADDS) software was used to model the capture and retraction features of the MDS. The model included complete mass properties of two satellites, a zero gravity environment, and contacting features of the MDS.

Some hand-selected cases with simple worst case relative misalignments were simulated and examined, with the focus on identifying general issues of concern. Examination of the results of these analyses revealed the following issues: 1) a likelihood of high loads at certain locations 2) possible difficulty in axial roll alignment during retraction 3) possible difficulty in timely removal of pitch/yaw misalignments 4) compliance and damping can facilitate capture.

An additional 400 cases were simulated to explore performance issues using a uniform distribution of initial condition parameters. The analysis concluded that the mechanism was always capable of positive captures given reasonable limits of relative initial test conditions.

4.1.3. 6 DOF testing

One of the most important tests of the OECS will undergo will involve a six degree of freedom (6 DOF) test. The main goals of this testing are to correlate/verify the dynamics analysis model and to demonstrate functionality and performance of the hardware in a flight-like environment. The test simulates full, relative six degrees of freedom with the actual hardware in the loop. During testing the active half of the hardware is mounted to a moveable platform that is supported by six hydraulic actuators. The passive half is mounted above the active half at a fixed location with a force/moment sensor in the load path. Software commands the six legs to start the test at a user-specified set of relative initial conditions between the active and passive halves. Once the test is started, software simulates the complete relative dynamics of the two vehicles due to the real contact between the active and passive halves as the latch arms of the active half close on the passive half. Two such tests are planned, one with MDS and one with the OECS qualification unit. While the OE flight unit will differ from the MDS hardware in some areas, the major components and kinematics related to the capture performance for both units is essentially the same. The information gained from the MDS testing represents a significant addition to the flight design effort. The 6 DOF testing represents an important step to test and exercise the hardware under conditions very similar to those experienced on orbit. 6 DOF testing is currently being performed as shown in Figure 7. For each hand selected test case executed at the 6 DOF facility, test results are then compared to the dynamic model simulation predictions. Comparison of the test data will confirm the model accurately depicts capture dynamics, and to provide an opportunity to spot any modeling errors or missed design issues before qualification is complete.

Figure 7: 6 DOF testing facilities

5. ORBITAL EXPRESS CAPTURE SYSTEM (OECS)

Upon completion of the MDS Phase II program, the OE program was well underway. With the maturity of the specifications required by the OE program and the design changes necessary for flight hardware, the following design changes were made for the OECS:

- Mass reduction of the active and passive mechanism: Using MDS as a baseline for size, SRC used finite element modeling and analysis to reduce structural mass by pocketing the structure where stress was not of concern.

- Flight electrical connectors and mounting mechanism: Flight heritage connectors designed with a mechanism for mating and de-mating was included in the OECS.

- Flight Motor: MDS used an off the shelf motor that was not flight ready. For the flight motor/actuator, an SRC Research motor was designed using heritage from a previous flight program.

- Additional capability of controlling spacecraft to spacecraft misalignment during capture: Dynamic modeling used to simulate capture scenarios showed the need for less pitch, yaw, and roll while docking. The MDS style grapple arm was modified to include a feature capable of limiting spacecraft motion while docking.

- Preload of mechanism for launch loads: MDS was never intended to fly, so it was not designed to tolerate launch loads. OECS was designed to do so by retracting the arms down to the top plate preloading the active mechanism for the determined launch loads.

- Potentiometers: Primary and redundant potentiometers were added to the design so grapple arm position would be known.

- Mated preload verification: While in the mated position, the OE program required that the mated interface preload be know while in flight. The mated interface preload determines the mated structural capability of the two spacecraft. This requirement was accomplished by a mechanism which measured the amount of preload at the interface. Once the mechanism gets to the proper preload, limit switches turn off the motor and a brake is applied to hold the preload constant.

- Push-off rods: Although the MDS push-off rods include damping further analysis showed that the damping characteristics needed to be modified. The strut design was changed from a single to a dual staged actuation with a soft spring preload/stiffness for the damper and a high preload/stiffness for the second stage.

5.1. Description of functionality

In order to understand the OECS unit, a description of its functionality is necessary. Figure 8 displays the typical steps involved in a capture operation.

1. The linkages of the active mechanism begin in a deployed (open) state. The passive structure is held in a station keeping envelope within the capture capability of the active mechanism.

2. Upon receipt of command, the motor begins to actuate a ball screw which translates an internal piston along the length of the active mechanism canister. The piston moves three separate four-bar linkages that make up the grappling linkages. The linkages then move downward over a roller feature. The camming action of the roller causes the linkages to constrict, engaging the passive structure. The wedge shaped architecture of the passive structure guides the tips of the linkages into center grooves. Capture is achieved as the passive structure is constrained within the bounds of the linkages.

3. As the linkage tips move down along the grooves, they engage a shelf feature, allowing the active and passive structures to be drawn together. As retraction proceeds, alignment occurs in stages. Continued motion of the linkages causes the interface plate of the passive structure to contact push-off rod struts that act as a three point alignment mount on the active mechanism. The alignment features each consist of a spring loaded pin with conical ends that seat into tapered cups on the passive structure. These features provide a gross alignment. With further retraction, additional features align the electrical couplers within their allowable tolerance.

4. At the final stages of retraction, the passive structure becomes fully constrained by a final set of cup/cone features. Rigidization then occurs as the motor applies the necessary preload to provide the required interface stiffness.

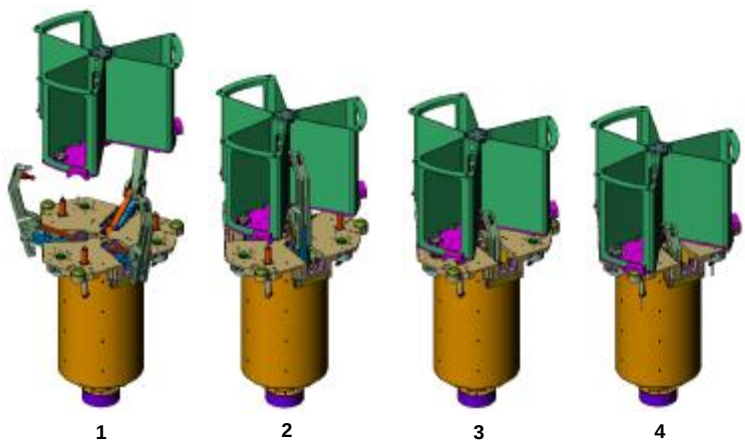

Figure 8: Stages of capture of the OECS mechanism

5.2. Active mechanism

The Active mechanism is composed of a top plate assembly to which the canister assembly is attached (Figure 9). Within the canister assembly is a drive train consisting of a motor, ball screw, and radial/thrust bearings which transfer load into the housing. All three linkages are fixed to a piston which is connected to a ball screw via a ball screw nut. The linkages consist of one upper grappling linkage and two lower linkages which make up a four bar connection. Mounted to the canister is a reaction roller that guides the linkages through deployment. Alignment occurs via two separate features: push-off rods, and alignment pins. The three push-off rods are spring loaded features that seat into alignment cups on the passive end to provide gross alignment. The cone mounts are hard mounted features that also seat into cup features on the passive side. This geometry provides a statically determinate final position after mate.

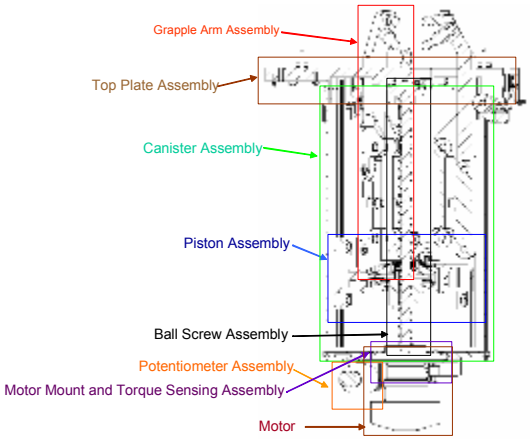

Figure 9: Active mechanism cross-section

5.3. Passive damping

The need for passive damping was derived from a customer request, simulation and prototype testing. Concerns had been raised regarding difficulties that could arise during capture; specifically, the passive half impacting the push-off mount and rebounding. While it was agreed that the passive side would need to be held within a station keeping envelope during capture, a non-zero relative velocity would likely exist between the two spacecraft. This could result in slight amounts of contact between the two faces of the active and passive halves, making it difficult to maintain the passive structure in the required envelope. Also of great concern was unintentional impact involving even larger than nominal velocity deltas, and the possibility of damage to the mechanism.

Another motivation to introducing damping involved oscillations occurring during the capture event. Testing of the prototype in a micro-g environment exhibited a tendency for the passive structure to oscillate within the constraints of the linkage tips and the push-off mounts. Computer simulations performed by Boeing confirmed this behavior. In order to address this issue, a spring damper system was added to the push-off struts on the active mechanism. Figure 10 depicts a cross section view of the push-off mounts with the spring damper system.

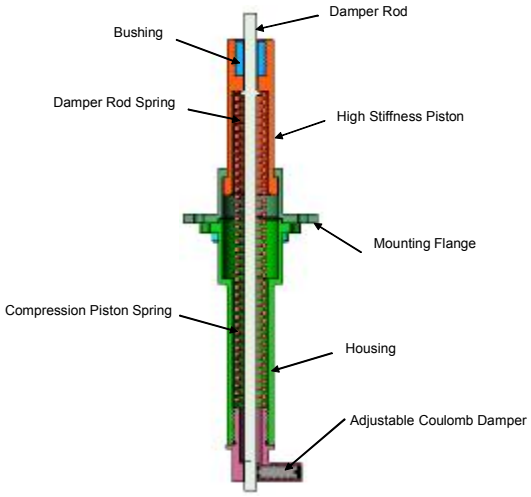

Figure 10: Push-off rod cross-section

5.4. Electrical coupling

The transfer of power across the mated interface represents a critical aspect of the servicing operation. The prototype hardware had used off-the-shelf electrical couplers, and had tested these couplers under a variety of conditions. However, the demands of the OE program require a flight qualified connector. During the span of the MDS work, research was conducted in order to identify a reliable connector. While a number of qualified connectors were identified, most were not qualified to be mated and unmated in space. Those that had been qualified under these conditions were impractical due to their size and expense. Therefore it was decided that the qualified couplers were not consistent with the SBIR scope. Instead, the research would be applied to the OE flight design, and off-the-shelf connectors would remain on the MDS hardware as place holders. The OECS is designed with flight qualified G&H brand connectors. The connectors are mounted on spring loaded devices (patent pending) that allow for misalignment while mating (Figure 11). During de-mate, the connector mechanism moves back to the connector nominal position.

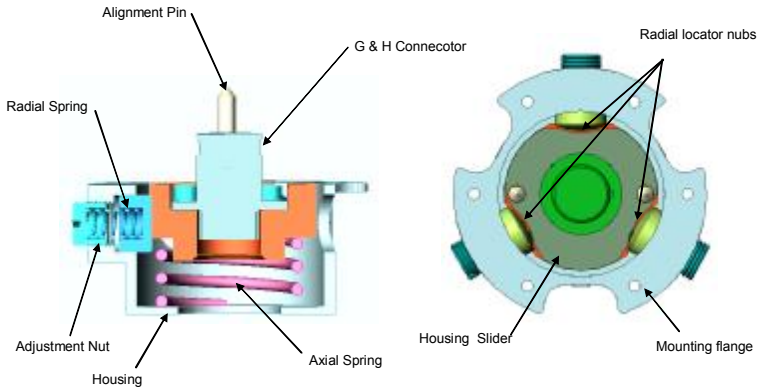

Figure 11: Electrical connector and mechanism

5.5. Torque sensing mechanism

Running the motor/actuator until proper preload is achieved was accomplished using a torque sensing mechanism (Figure 12). To apply a preload in the mated position, a specific torque from the motor is required. The torque sensing mechanism is adjusted to activate limit switches at the set torque needed for proper preload. Once the limit switches are activated, the motor is commanded to stop. In the stop mode the motor/actuator applies a brake holding the preload developed.

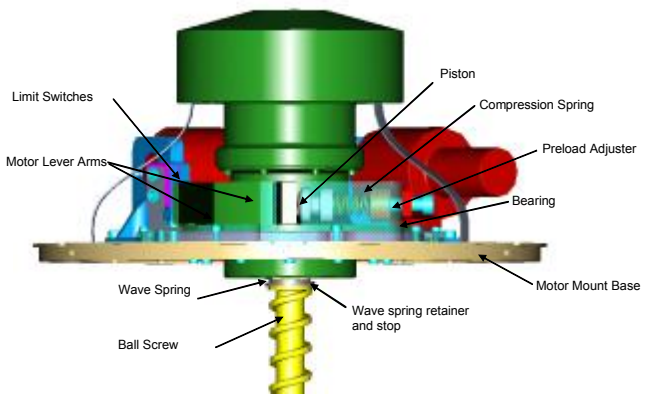

Figure 12: Preload verification mechanism

5.6. Passive assembly

The passive assembly (Figure 13) is a three wedge shaped trefoil. The faces of each wedge terminate at a center groove that runs along its length. The passive interface consists of an interface plate that is mounted to the three trefoils. Part of this geometry includes retention lips, or shelves, which provide the linkage with a positive feature to grapple. The interface also includes kinematic cup features which help to align the structure and institute preload. The OECS passive structure is significantly changed from the MDS passive structure. The following changes were made:

1) Unlike OECS passive assembly, MDS is one monolithic structure. The change to three structures and an interface plate cut weight of the passive structure by approximately a third. Because the passive assembly is the only required hardware for client spacecraft, minimizing mass on this assembly greatly increases customer desire to use the docking system.

2) The passive assembly is hard anodized. This provides proper thermal properties for the OE program.

3) The OE program required a sensor to confirm that capture had been successfully accomplished (Figure 6, step 2). L.E.D's located on the passive assembly detect when the active assembly arms are in the captured position

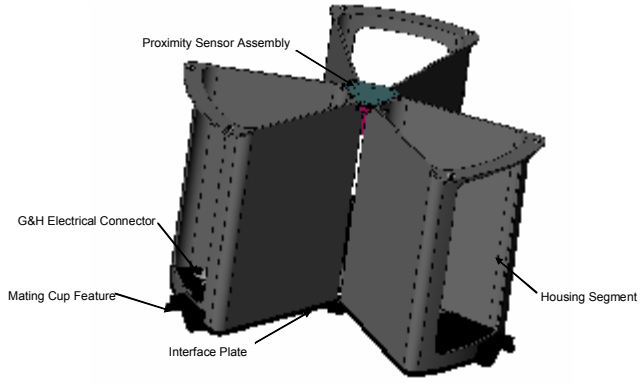

Figure 13: Passive assembly

5.7. Proximity sensor

Capture position is detected by the breaking of an Infra Red light path by the linkage tips within each passive half trough. See Figure 14.

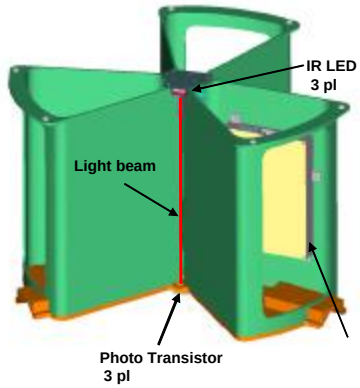

Figure 14: Proximity sensor

5.8. OECS TESTING

5.8.1. In-house testing

SRC is currently in the process of developing an in house test plan. In-house testing will likely include many of the same elements that were present in the prototype and MDS testing: mate and de-mate verification, stiffness characterization, and off-load testing. In addition, thermal, thermal vacuum, and vibration testing will be performed.

5.8.2. Computer simulation

Like with the MDS, the OECS will require dynamic modeling to confirm capture capability. The same software and methodology is being used as was used for MDS.

5.8.3. 6 DOF testing

The final phase of qualification testing will involve 6 DOF testing similar to that which is now being performed on the MDS. Although the MDS and OECS mechanism features important for capture and alignment are almost identical, changes could be made to the design based on the results of 6 DOF testing of the MDS. Furthermore, the manufacturing fidelity of the OECS qualification components will be flight-identical, unlike the MDS which is of engineering development unit quality. For these two main reasons, a second 6 DOF test of the qualification unit will take place. The goal is to once again confirm that the dynamic modeling is accurately depicting the dynamics encountered during capture and alignment.

6. CONCLUSION

The OECS represents an outstanding achievement in terms of its evolution. The prototype and MDS units provided SRC with valuable research and a thorough understanding of the issues concerning autonomous capture. The blending of technology and vision has yielded a simple and effective concept. Through a series of design trades and system testing, the application of minimal mechanisms, and the use of common proven technology (i.e. motors, lead screws, and linkages), a highly functional design resulted. What began, during the primary phase, as a well developed concept has quickly evolved into a commercially viable product. While the challenge of ongoing work is significant, the design effort has greatly been facilitated by the combined innovation of the SBIR and its integration into Orbital Express. As the OECS work concludes, the contribution it provides towards Orbital Express will bring the vision of reliable cost effective autonomous docking closer to reality.