System F6 On-Orbit Demonstration Testbed Proposers' Day

Major John Losinski, Program Manager
Tactical Technology Office

May 3, 2012

APPROVED FOR PUBLIC RELEASE. DISTRIBUTION UNLIMITED.

Proposers' Day – agenda

Introduction and DARPA/TTO Overview	**Maj John Losinski**
DARPA BAA Process	Mr. Chris Glista
DARPA BAA Process Q&A	Mr. Chris Glista
System F6 Program Overview	Maj John Losinski
System F6 Demo Testbed Solicitation Details	Ms. Dawn McIntosh
System F6 Demo Testbed Solicitation Q&A	Maj John Losinski

APPROVED FOR PUBLIC RELEASE. DISTRIBUTION UNLIMITED.

DARPA / TTO Overview

Major John Losinski, Program Manager
Tactical Technology Office

May 3, 2012

APPROVED FOR PUBLIC RELEASE. DISTRIBUTION UNLIMITED.

Mission

The Defense Advanced Research Projects Agency (DARPA) was established in 1958 to **prevent strategic surprise** from negatively impacting U.S. national security and **create strategic surprise** for U.S. adversaries by maintaining the technological superiority of the U.S. military.

To fulfill its mission, the Agency relies on **diverse performers** to apply multi-disciplinary approaches to both advance knowledge through basic research and **create innovative technologies** that address current practical problems through applied research.

As the DoD's **primary innovation engine**, DARPA undertakes projects that are finite in duration but that create **lasting revolutionary change**.

APPROVED FOR PUBLIC RELEASE. DISTRIBUTION UNLIMITED.

Continuous accomplishment

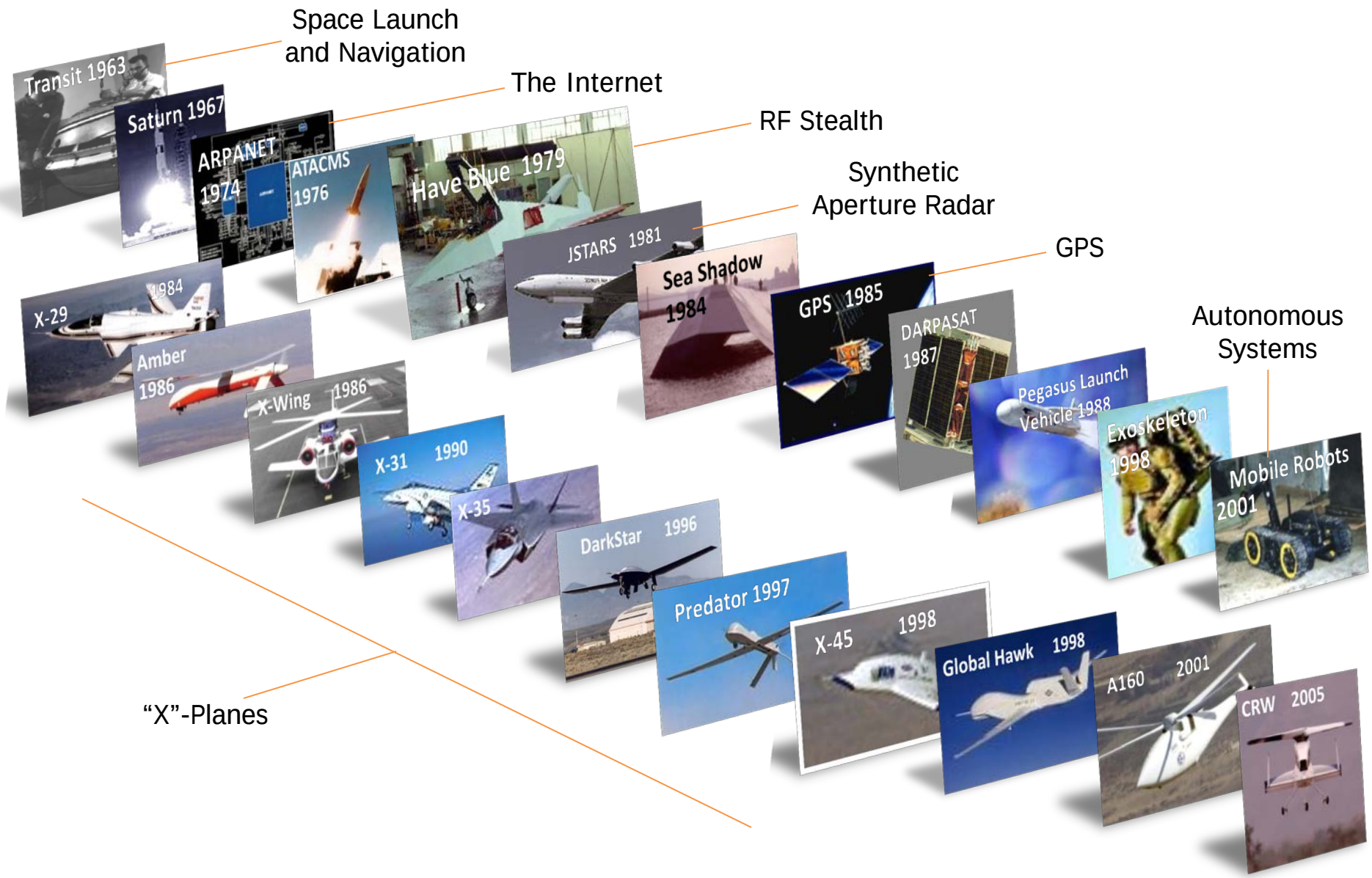

APPROVED FOR PUBLIC RELEASE. DISTRIBUTION UNLIMITED.

Organization

AEO
Adaptive Execution Office

- Agile Programs with Frequent Development Cycles
- Conduct Systematic Rigorous
- Assessments
- Explore New Contracting Approaches
- Develop Strong Relationships

DSO
Defense Sciences Office

- Physical Sciences
- Materials
- Mathematics
- Training & Human Effectiveness
- Biological Warfare Defense
- Biology

I2O
Information Innovation Office

- Global ISR
- Cyber
- Social Networks
- Computational Social Science
- Language Transparency
- Edge Finding
- Training/ Education

MTO
Microsystems Technology Office

- Basic Science Core
- Devices
- Integration
- Power
- Architectures
- Application

STO
Strategic Technology Office

- Comms & Networks
- Global Tactical ISR
- Energy
- Hybrid Warfare
- Extreme Environments

TTO
Tactical Technology Office

- Space Systems & Space Awareness
- Hypersonics
- Space Access
- Aero- & Hydrodynamic Systems
- Ground & Soldier Systems
- Design Synthesis
- Manufacturing
- Qualification/V&V
- Autonomy

APPROVED FOR PUBLIC RELEASE. DISTRIBUTION UNLIMITED.

Professional reach

Flat organization

Little hierarchy to ensure the free and rapid flow of information, ideas, and decisions.

Outstanding program managers

DARPA hires creative, independent people with big ideas and empowers them.

Project-based assignments

Projects organized around a challenge model and typically last three to five years; longer if necessary to facilitate transition.

No DARPA labs

Majority of the research is sponsored in industry and universities with a small amount in government labs.

Flexible outsourcing of staff and performers

Great talents and ideas from industry, universities, and government labs with technical, contracting, and administrative services from other commercial and government agencies.

APPROVED FOR PUBLIC RELEASE. DISTRIBUTION UNLIMITED.

www.darpa.mil

APPROVED FOR PUBLIC RELEASE. DISTRIBUTION UNLIMITED.

Proposers' Day – agenda

Introduction and DARPA/TTO Overview	Maj John Losinski
DARPA BAA Process	**Mr. Chris Glista**
DARPA BAA Process Q&A	Mr. Chris Glista
System F6 Program Overview	Maj John Losinski
System F6 Demo Testbed Solicitation Details	Ms. Dawn McIntosh
System F6 Demo Testbed Solicitation Q&A	Maj John Losinski

APPROVED FOR PUBLIC RELEASE. DISTRIBUTION UNLIMITED.

DARPA BAA Process

Mr. Christopher Glista, Contracting Officer
Contracts Management Office

May 3, 2012

APPROVED FOR PUBLIC RELEASE. DISTRIBUTION UNLIMITED.

BAA Specifics

- Current posting is DRAFT only
- Final BAA and any amendments will be posted in FEDBIZOPPS
- BAA will cover all info needed to propose
- **Initial Selection Round Proposals anticipated due June 19, 2012**
- Instructions detailed in the BAA (**Follow closely**)
- **Following the proposal instructions assists the evaluation team to clearly understand what is being proposed and supports a timely negotiation.**
- **ALL** questions to DARPA-BAA-12-32@darpa.mil

APPROVED FOR PUBLIC RELEASE. DISTRIBUTION UNLIMITED.

BAA Background

- Federal Acquisition Regulation (FAR) Part 35

  http://farsite.hill.af.mil

- "A general announcement of an agency's research interest including criteria for selecting proposals of all offerors capable of satisfying the Government's needs."
- For the acquisition of basic and applied research <u>not related to the development of a specific system or hardware procurement.</u>

APPROVED FOR PUBLIC RELEASE. DISTRIBUTION UNLIMITED.

BAA Background (cont.)

- Used when proposals with varying technical and scientific approaches can be expected
- Proposals need not be evaluated against one another since they are not submitted in accordance with a common work statement.
- Primary basis for selecting proposals shall be technical, importance to agency programs, and fund availability.
- Cost realism shall also be considered

APPROVED FOR PUBLIC RELEASE. DISTRIBUTION UNLIMITED.

BAA Background (cont.)

- Contractors SHALL NOT subcontract technical or scientific work without the contracting officer's knowledge

APPROVED FOR PUBLIC RELEASE. DISTRIBUTION UNLIMITED.

IMPLICATIONS

- FAR PART 15 “Contracting By Negotiation” does not apply in full
  - No “competitive range” determination
  - No mandatory “discussions”
  - No opportunity for proposal revision
- “Cost and Pricing Data” (certification required for all FAR-based contract proposals greater than $700K)
- Subcontract consent and key personnel clauses to be included in awards

APPROVED FOR PUBLIC RELEASE. DISTRIBUTION UNLIMITED.

Communications

- **ALL** questions to DARPA-BAA-12-32@darpa.mil
- After Receipt of Proposals – Government (PM/PCO) may communicate with proposers to understand the meaning of some aspect of the proposal that is not clear or to obtain confirmation or substantiation of a proposed approach, solution, or cost estimate
- Informal feedback may be provided once selection(s) are made – no “ranking” provided

APPROVED FOR PUBLIC RELEASE. DISTRIBUTION UNLIMITED.

Applicant Eligibility

- All interested/qualified sources may respond
- International participants/resources may participate to the extent authorized by applicable Security Regulations, Export Laws, etc.
- International Traffic in Arms Regulations (ITAR)
  - Identify in proposal modeled items believed to be subject to ITAR regulations
- Small Business Participation Encouraged, Teaming Not Required

APPROVED FOR PUBLIC RELEASE. DISTRIBUTION UNLIMITED.

Applicant Eligibility (cont.)

- Government agencies/labs, FFRDCs cannot propose to this BAA in any capacity, **UNLESS** they can clearly demonstrate the work is not otherwise available from the private sector AND they also provide written documentation citing the specific statutory authority (as well as, where relevant, contractual authority) establishing their eligibility to propose to government solicitations

APPROVED FOR PUBLIC RELEASE. DISTRIBUTION UNLIMITED.

Organizational Conflict of Interest

- All facts relative to a potential conflict of interest must be disclosed.
- Examples of conflicts listed at FAR Part 9.505
  - Provided Systems Engineering and Technical Direction
    - Contractors MAY NOT simultaneously provide SETA support and be a technical performer at DARPA without waiver approved by DARPA Director

APPROVED FOR PUBLIC RELEASE. DISTRIBUTION UNLIMITED.

Award Instrument

- Proposers without DCAA-approved cost accounting systems are not eligible for cost-reimbursement contracts. May receive fixed price contracts or OTs with performance-based payments.
- **No grants or cooperative agreements**
- Section 845 Other Transaction – must meet eligibility criteria
  - 1/3 cost share or non-traditional defense contractor participating to "a significant extent."

APPROVED FOR PUBLIC RELEASE. DISTRIBUTION UNLIMITED.

Rights to Technical Data and Computer Software

- Assert rights to all technical data & computer software generated, developed, and/or delivered to which the Government will receive less than Unlimited Rights
  - Assertions apply to Prime and Subs
  - Justify “Basis of Assertion”
  - Use defined “Basis of Assertion” and “Rights Category”

APPROVED FOR PUBLIC RELEASE. DISTRIBUTION UNLIMITED.

www.darpa.mil

APPROVED FOR PUBLIC RELEASE. DISTRIBUTION UNLIMITED.

Proposers' Day – agenda

Introduction and DARPA/TTO Overview	Maj John Losinski
DARPA BAA Process	Mr. Chris Glista
DARPA BAA Process Q&A	**Mr. Chris Glista**
System F6 Program Overview	Maj John Losinski
System F6 Demo Testbed Solicitation Details	Ms. Dawn McIntosh
System F6 Demo Testbed Solicitation Q&A	Maj John Losinski

APPROVED FOR PUBLIC RELEASE. DISTRIBUTION UNLIMITED.

Proposers' Day – agenda

Introduction and DARPA/TTO Overview	Maj John Losinski
DARPA BAA Process	Mr. Chris Glista
DARPA BAA Process Q&A	Mr. Chris Glista
System F6 Program Overview	**Maj John Losinski**
System F6 Demo Testbed Solicitation Details	Ms. Dawn McIntosh
System F6 Demo Testbed Solicitation Q&A	Maj John Losinski

APPROVED FOR PUBLIC RELEASE. DISTRIBUTION UNLIMITED.

System F6 Program Overview

Major John Losinski, Program Manager
Tactical Technology Office

May 3, 2012

APPROVED FOR PUBLIC RELEASE. DISTRIBUTION UNLIMITED.

Fractionated Space Architectures

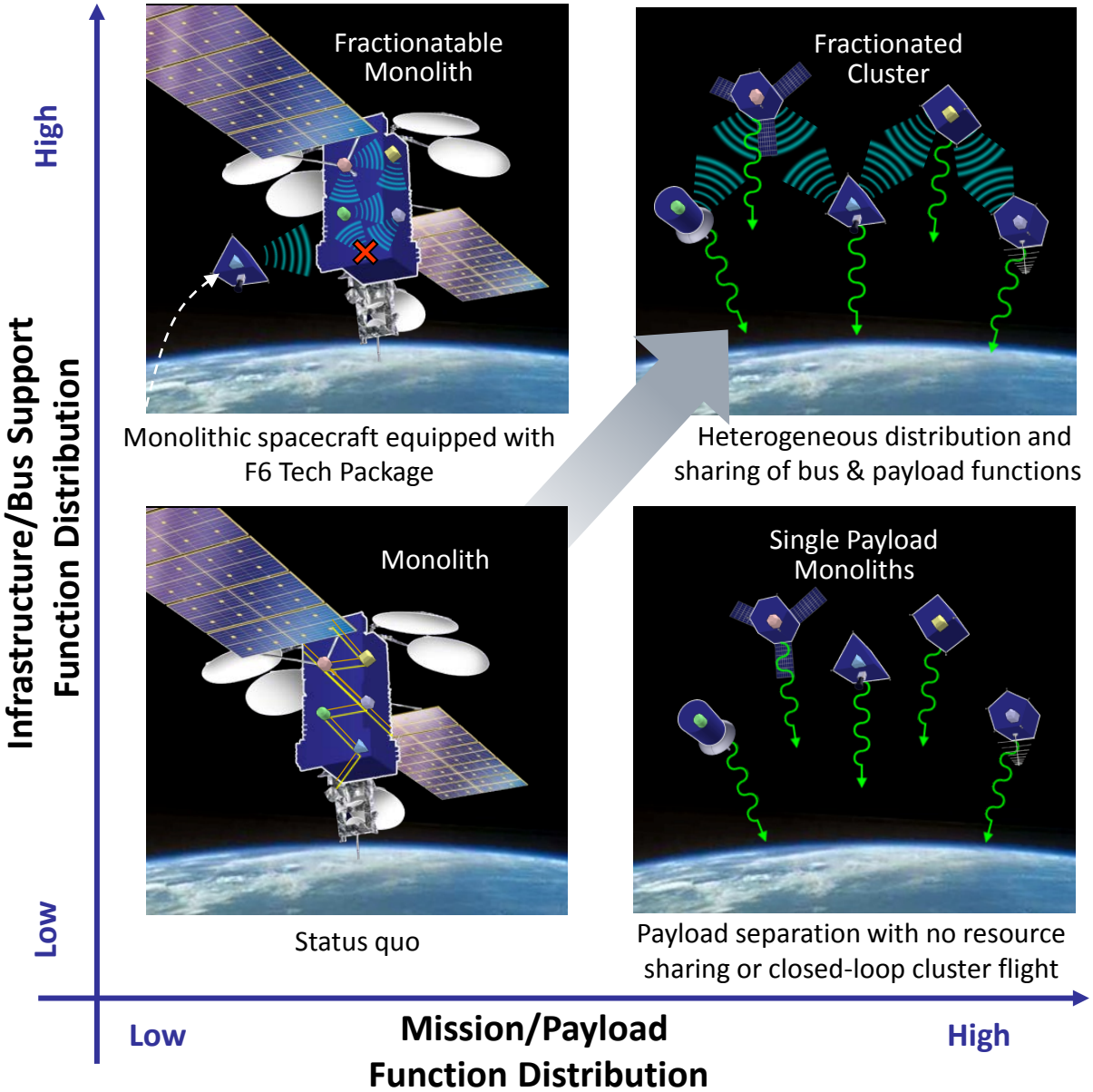

Enablers of Fractionated Space Architectures

- Cluster maintenance
- Rapid cluster maneuvering
- Relative navigation
- Wireless networking
- Real-time resource sharing
- Multi-level security

- 24/7 LEO-ground connectivity

- Open F6 Developer's Kit
- Low cost F6 Tech Package

- Adaptability Metrics
- Design-for-Adaptability Tools

APPROVED FOR PUBLIC RELEASE. DISTRIBUTION UNLIMITED.

Military Utility of Fractionated Architectures

Fractionated System

F6 combines the strategies of distribution, modularization, and servicing into a single architecture, creating *virtual spacecraft* made up of free-flying, wirelessly networked elements. In addition to diversifying cost, schedule, and performance **risk**, this approach provides a more **responsive**, **adaptable** and **survivable** system than traditional, monolithic satellites.

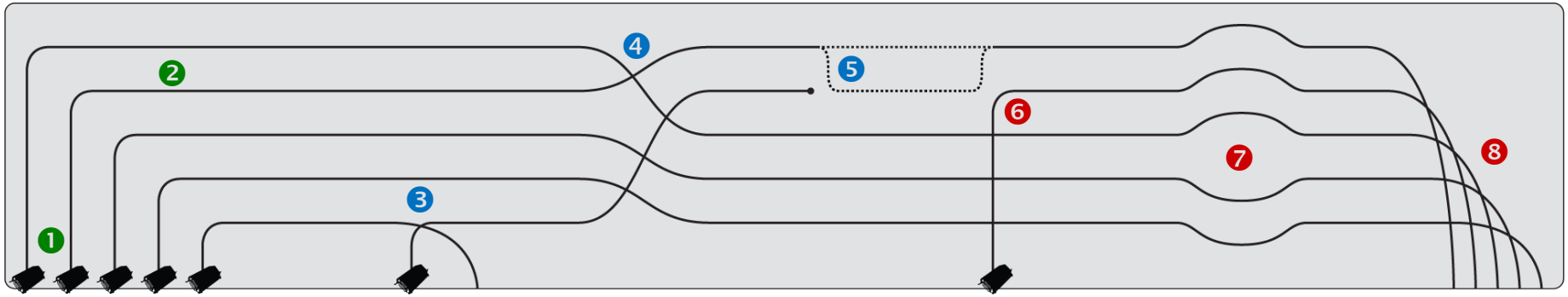

1. Incremental deployment
2. Utility accrues before all pieces on orbit
3. Component upgrade/replacement possible
4. Reconfigure for different missions
5. Cluster-level redundancy
6. Replace failed components
7. Scatter to avoid attack or debris
8. Graceful degradation

Monolithic System

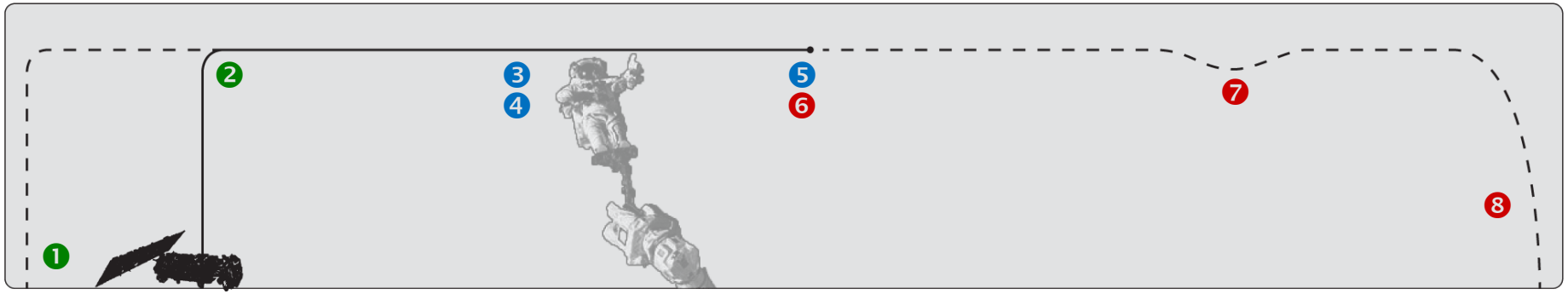

1. Single component can delay launch
2. No utility until entire system is launched
3. Upgrades rarely feasible
4. Capabilities strictly set
5. No system-level redundancy
6. Failure of any part may prove catastrophic
7. Larger target is more vulnerable
8. Capability ends abruptly

APPROVED FOR PUBLIC RELEASE. DISTRIBUTION UNLIMITED.

Key Program Artifacts

- **On-Orbit Demo**—demonstrate universal attributes of fractionated architectures
  - Launch in 2015, 6-month duration, low-earth orbit (LEO)
  - Mission agnostic beyond demonstration of key fractionation capabilities
  - Provide or host shared payload devices and associated services
  - Provide support services for integration and on-orbit demo operations

- **F6 Developer's Kit (FDK)**—everything needed for an independent third party to develop a module that can fully participate in a fractionated cluster
  - Interface standards, network protocols, software, behaviors/rules
  - Freely distributed under an open source license, freely exportable
  - Solicited previously under FDK BAA (DARPA BAA-11-01)

- **F6 Technology Package (F6TP)**—low cost, commercialized physical instantiation of the FDK that enables a spacecraft bus to become a fractionated cluster module
  - Executes protocol stack, middleware, cluster flight software
  - Interfaces to wireless inter-module transceiver, F6 payloads, and spacecraft bus
  - Multiple sources, capable of supporting multiple spacecraft bus types
  - Solicited previously under F6TP BAA (DARPA BAA-12-18)

APPROVED FOR PUBLIC RELEASE. DISTRIBUTION UNLIMITED.

Program Structure and Schedule

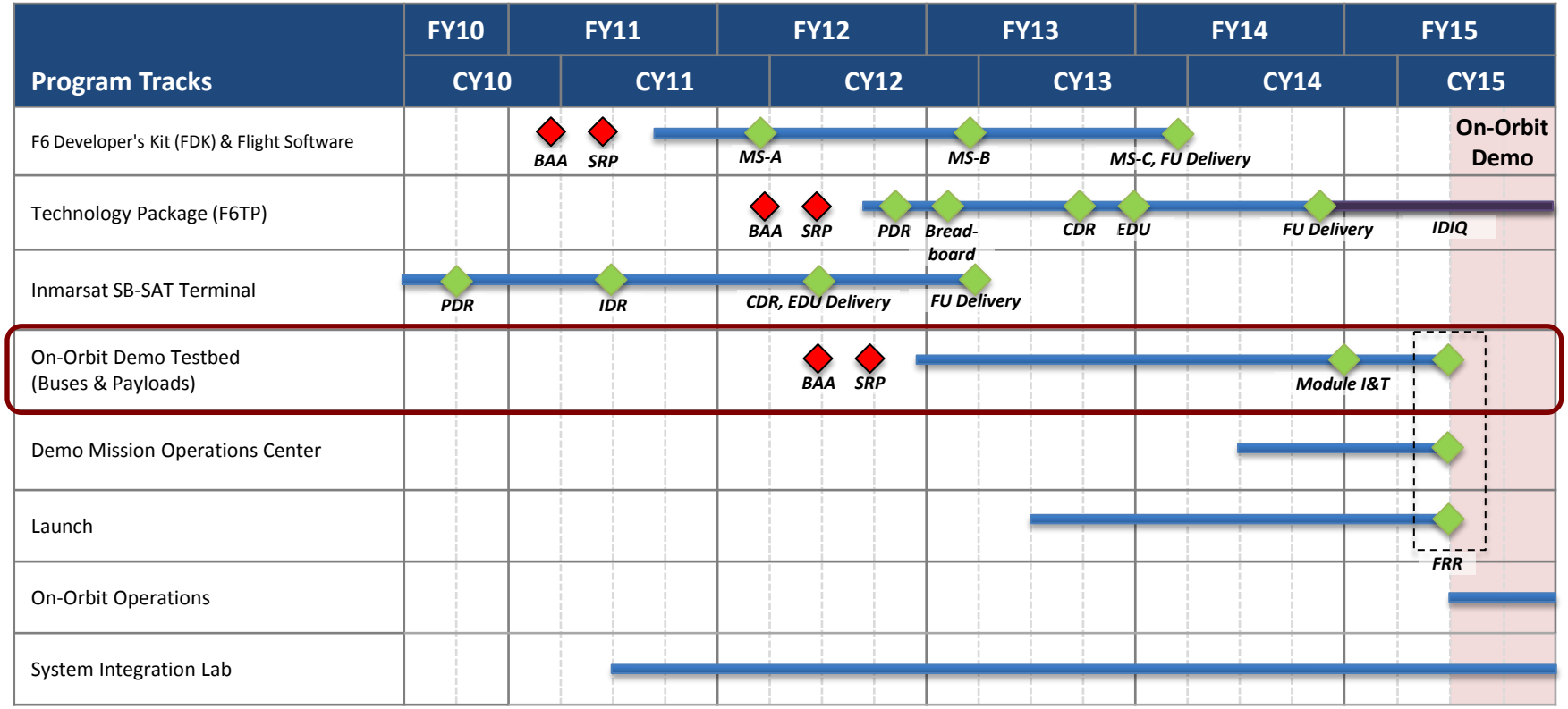

APPROVED FOR PUBLIC RELEASE. DISTRIBUTION UNLIMITED.

Notional System F6 On-Orbit Demo

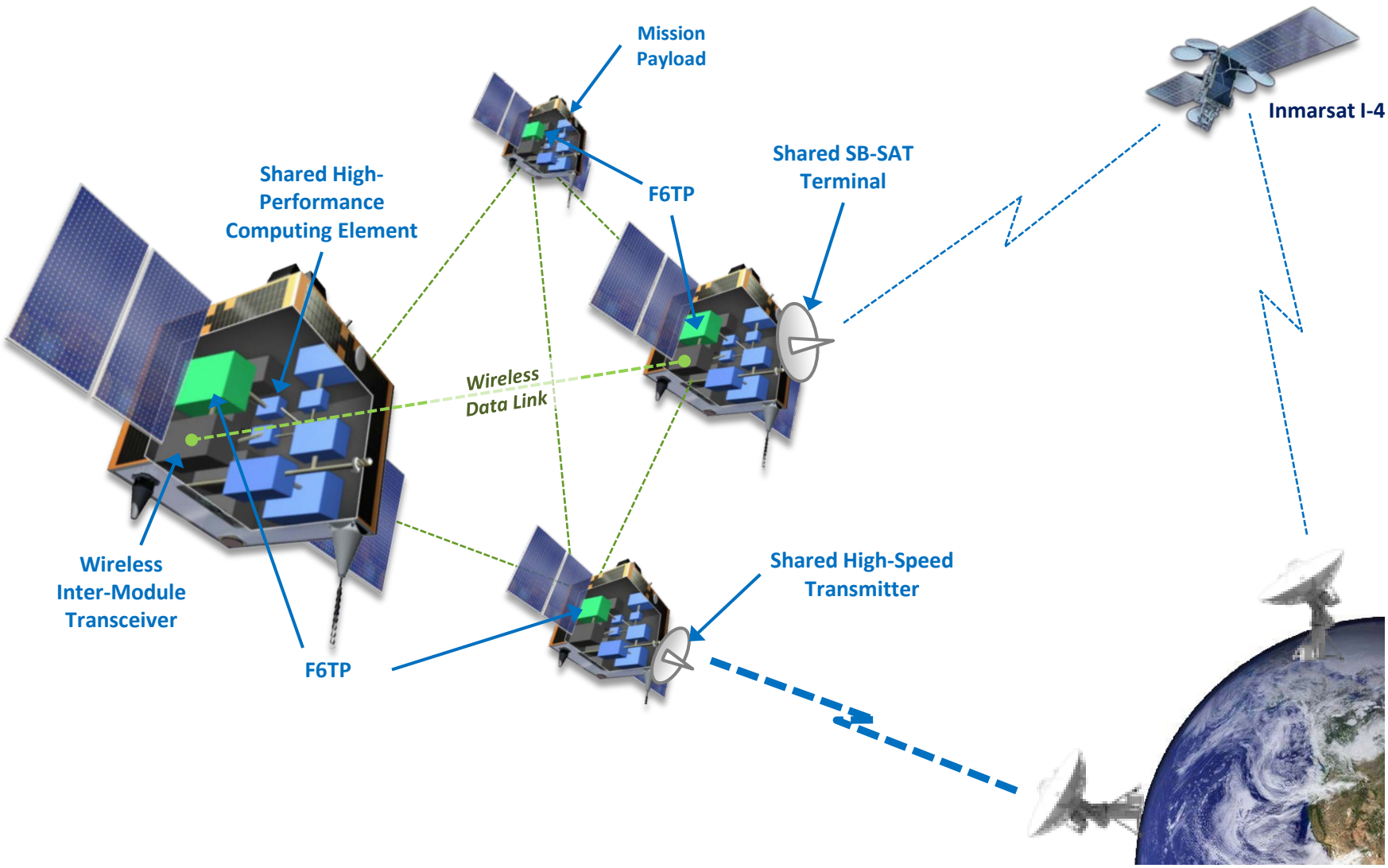

APPROVED FOR PUBLIC RELEASE. DISTRIBUTION UNLIMITED.

Key Capabilities for 2015 On-Orbit Demonstration

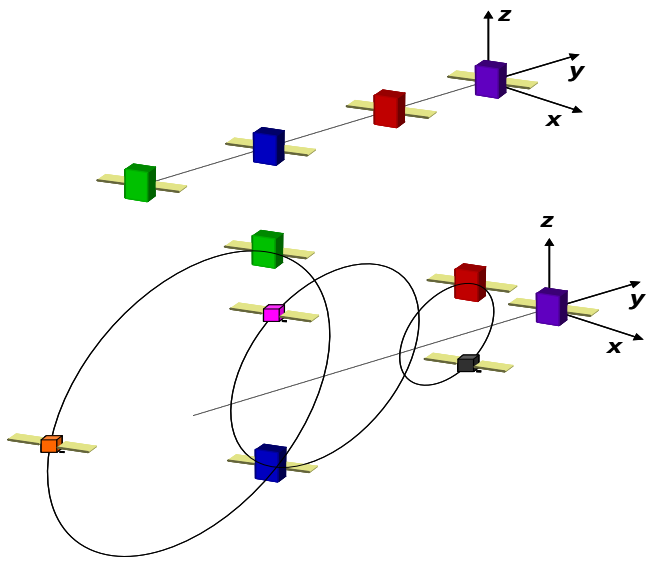

Demo 2: Resource Sharing at Multiple Security Levels

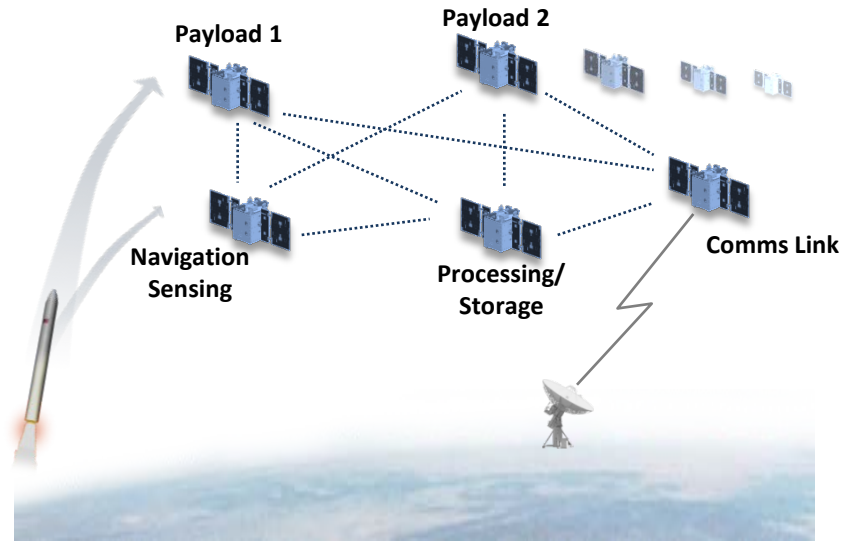

Demo 3: Cluster-Level Fault Tolerance

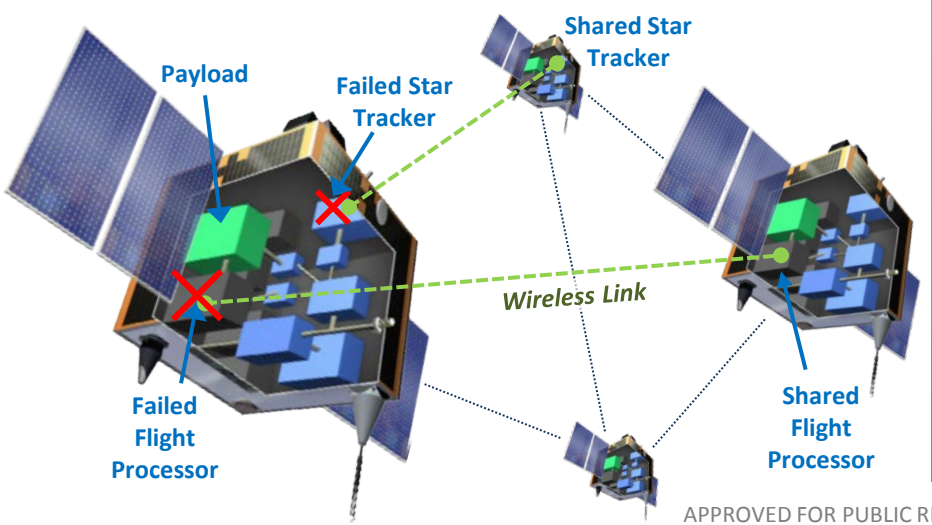

Demo 4: Defensive Scatter and Re-Gather

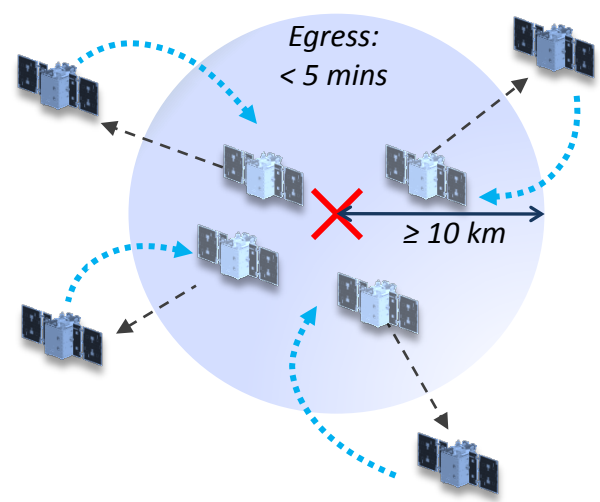

APPROVED FOR PUBLIC RELEASE. DISTRIBUTION UNLIMITED.

FDK Technical Areas*

<table>
<tr><th>OSI Model</th><td colspan="5"></td></tr>
<tr><td>Layer 7
(Application)</td><td rowspan="5"></td><td>Cluster Flight
(BAA Technical Area 4)</td><td>Payload Application
in Security Domain A</td><td>Payload Application
in Security Domain B</td><td>…</td></tr>
<tr><td>Layer 6
(Presentation)</td><td colspan="4" rowspan="4">Information Architecture
(BAA Technical Area 3)</td></tr>
<tr><td>Layer 5
(Session)</td></tr>
<tr><td>Layer 4
(Transport)</td></tr>
<tr><td>Layer 3
(Network)</td></tr>
<tr><td>Layer 2
(Data Link)</td><td colspan="5" rowspan="2">Wireless Inter-Module Communications
(BAA Technical Area 2)</td></tr>
<tr><td>Layer 1
(Physical)</td></tr>
</table>

* Aligned to prior System F6 FDK BAA issued in Fall 2010.

APPROVED FOR PUBLIC RELEASE. DISTRIBUTION UNLIMITED.

Wireless Inter-Module Communications

- Aeronix and Southwest Research Institute

- Scope
  - Low data rate radios:
    - S-Band, mesh topology, up to 13.5Mbps
    - Ka-Band, mesh topology, up to 8.3Mbps
  - High data rate radio:
    - V-Band, point-to-point, up to 1Gbps per link

- Deliverables
  - FDK inputs: Layer 1, 2* protocols, software, reference implementations
  - Full terrestrial prototype test FDK
  - Flight-ready units expected in 4Q FY2013

* Layer numbers refer to the OSI Reference Model

APPROVED FOR PUBLIC RELEASE. DISTRIBUTION UNLIMITED.

Information Architecture

- Vanderbilt University

- Scope
  - Layers 3 through 7 network protocols for space and terrestrial network
  - Distributed resource sharing across multiple security domains
  - Real-time fault tolerance, i.e., network and resource reconfiguration to maintain safety-critical functions and gracefully degrade mission capability

- Deliverables
  - FDK Inputs: Operating system, Layers 3-7 protocols, middleware, multi-level security architecture
  - Fully verified and validated flight software

APPROVED FOR PUBLIC RELEASE. DISTRIBUTION UNLIMITED.

FDK Technical Area Four

Cluster Flight

- Emergent Space Technologies

- Scope
  - Multi-body cluster flight algorithms and behaviors
  - Passively safe relative orbit configurations
  - Long-duration semi-autonomous cluster ops
  - Autonomous rapid maneuvering capability—defensive scatter (20 km, 5 mins)

- Deliverables
  - FDK Inputs: Algorithms, behaviors/rules, reference implementation
  - Fully verified and validated flight software

APPROVED FOR PUBLIC RELEASE. DISTRIBUTION UNLIMITED.

Design Tools for Adaptable Systems

- Jet Propulsion Laboratory (JPL) and Stevens Institute of Technology

- Scope
  - When does the business case for fractionated architectures close?
  - When it does close, how should a system be optimally fractionated?
  - Quantitative measure of adaptability
  - Quantitative trade-offs between adaptability and traditional system attributes (size, weight, power, cost, performance, etc.)

- Deliverables
  - Fully-functional, validated, polished, well-documented, user-friendly tool
  - Potential to inform F6TP business case and design choices

APPROVED FOR PUBLIC RELEASE. DISTRIBUTION UNLIMITED.

F6 Technology Package (F6TP)

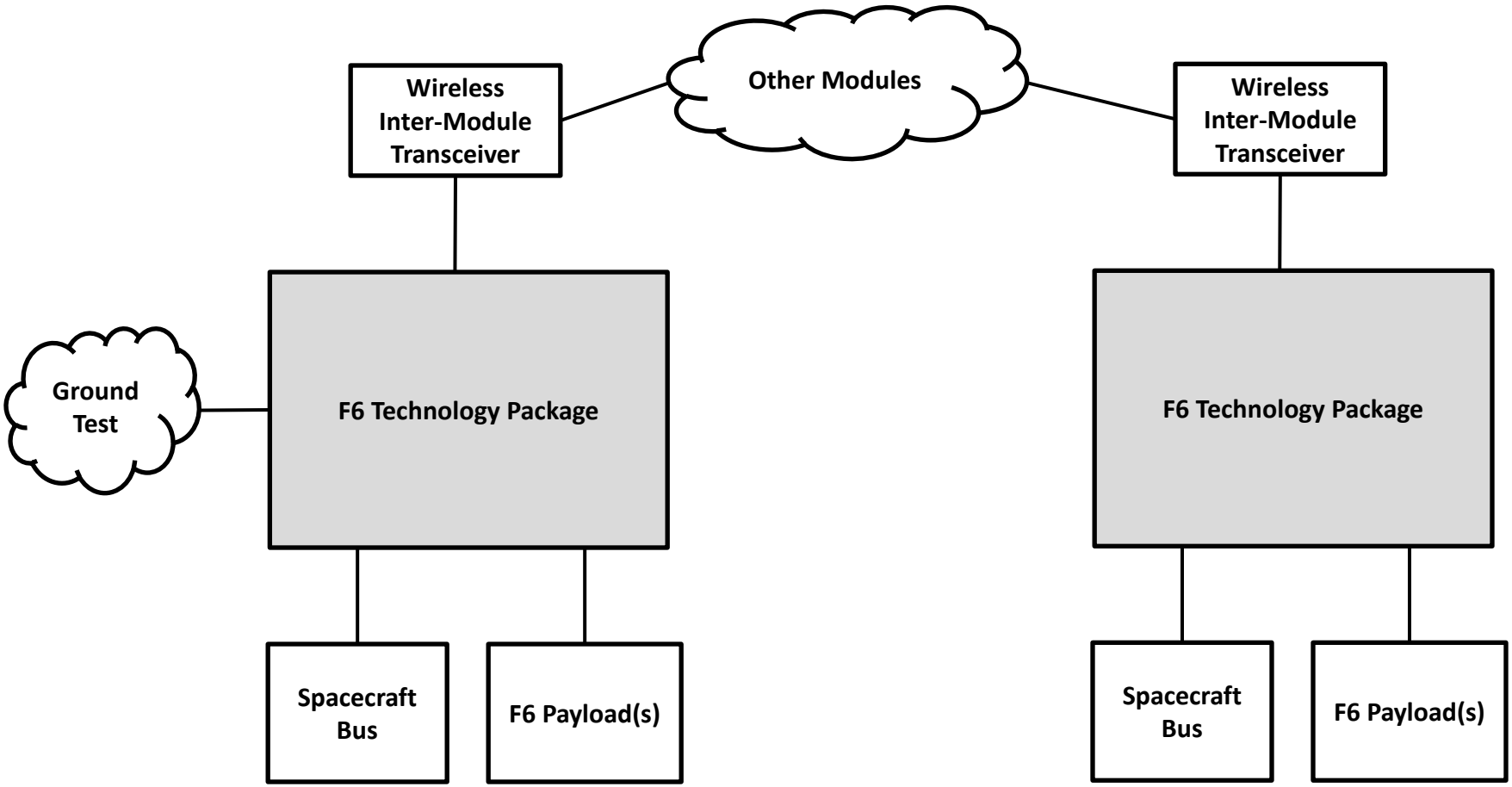

APPROVED FOR PUBLIC RELEASE. DISTRIBUTION UNLIMITED.

F6 Technology Package (F6TP)

- Scope
  - Execute FDK software and interfaces with F6 devices (wireless transceivers and shared payloads)
  - Interface with spacecraft bus to exchange attitude, timing, navigation, commands, telemetry, and acknowledgements
  - Optimized SWaP (<3,000 cm^3, < 5kg, < 30 W peak)

- Deliverables
  - Breadboards, Engineering Design Unit, and Engineering Qualification Unit
  - Flight units expected 3Q FY2014
  - IDIQ (indefinite delivery/indefinite quantity) contract for flight units

APPROVED FOR PUBLIC RELEASE. DISTRIBUTION UNLIMITED.

www.darpa.mil

APPROVED FOR PUBLIC RELEASE. DISTRIBUTION UNLIMITED.

Proposers' Day – agenda

Introduction and DARPA/TTO Overview	Maj John Losinski
DARPA BAA Process	Mr. Chris Glista
DARPA BAA Process Q&A	Mr. Chris Glista
System F6 Program Overview	Maj John Losinski
System F6 Demo Testbed Solicitation Details	**Ms. Dawn McIntosh**
System F6 Demo Testbed Solicitation Q&A	Maj John Losinski

APPROVED FOR PUBLIC RELEASE. DISTRIBUTION UNLIMITED.

System F6 On-Orbit Demo Testbed Solicitation Details

Ms. Dawn McIntosh, System F6 Chief Engineer
NASA Ames Research Center

May 3, 2012

APPROVED FOR PUBLIC RELEASE. DISTRIBUTION UNLIMITED.

Important Notes

- This briefing is based on the DRAFT solicitation (BAA) posted at:
  - https://www.fbo.gov/spg/ODA/DARPA/CMO/DARPA-SN-12-39/listing.html
- The text of the final solicitation will supersede anything briefed here
- Your comments and questions are important to improving the final BAA
  - Ask them in the Q&A session following this briefing
  - E-mail them to DARPA-BAA-12-32@darpa.mil

APPROVED FOR PUBLIC RELEASE. DISTRIBUTION UNLIMITED.

Notional Timeline

- Draft BAA released—19 April 2012
- Proposers' Day/ Draft BAA comments due—4 May 2012
- Final BAA released—4 May 2012 (est.)
- BAA questions due—1 June 2012 (est.)
- BAA question responses posted by—6 June 2012 (est.)
- Proposals due—19 June 2012 (est.)
- Selection Notification—6 July 2012 (est.)
- Contract Award—early October 2012 (est.)

APPROVED FOR PUBLIC RELEASE. DISTRIBUTION UNLIMITED.

System F6 Program Integration

- F6 Demo Testbed performers are expected to collaborate with FDK, F6TP, and Ground Support (to be determined at a later date) performers to integrate and verify and validate interfaces and functional objectives

- Open sharing between all F6 performers is expected at program-wide PI meetings and collaboration forums including wiki and teleconferences

- NASA Ames F6 System Integration Lab (SIL) will provide common software repository, wiki, issue tracking tools, and infrastructure for integration demonstrations

APPROVED FOR PUBLIC RELEASE. DISTRIBUTION UNLIMITED.

Proposal Info

- Proposals intended to be concise but technically specific
  - Single integrated technical and cost volume
  - Procurement contract (CPFF, FFP-Milestone Payable), other transaction agreement (OTA), or Space Act agreement (SAA) instruments possible
  - Contracted by DARPA/CMO or NASA Ames (TBD)
- Proposal evaluation criteria
  - Overall Scientific and Technical Merit
  - Cost Realism
  - Realism of Proposed Schedule
  - Proposer's Capabilities and/or Related Experience
  - Potential Contribution and Relevance to the DARPA Mission
- Opportunity for written Q&A during proposal preparation period
  - Direct questions on the final BAA to: **DARPA-BAA-12-32@darpa.mil**
  - Only questions of general interest will be answered via a FedBizOpps posting
  - No one-on-one discussions will be held with the Program Office after today

APPROVED FOR PUBLIC RELEASE. DISTRIBUTION UNLIMITED.

On-Orbit Demo Testbed BAA Philosophy

- Populate demo cluster with 4 modules consisting of a cost-effective spacecraft bus paired with a unique shared resource payload

- Each module corresponds to a Technical Area in the BAA:
  - Technical Area One: Host Inmarsat SB-SAT Terminal
  - Technical Area Two: Supply and host high-speed space-to-ground transmitter
  - Technical Area Three: Supply and host high-speed computing element
  - Technical Area Four: Host a government-supplied mission payload

- Proposals should address all common objectives and the objectives within a <u>single</u> technical area only
  - Proposers are invited to propose to multiple Technical Areas, but must submit <u>separate proposals</u>
  - Potential <u>cost savings resulting from multiple awards</u> should be provided in the cost proposal

APPROVED FOR PUBLIC RELEASE. DISTRIBUTION UNLIMITED.

F6 Demo Spacecraft Bus & Shared Payload Interfaces

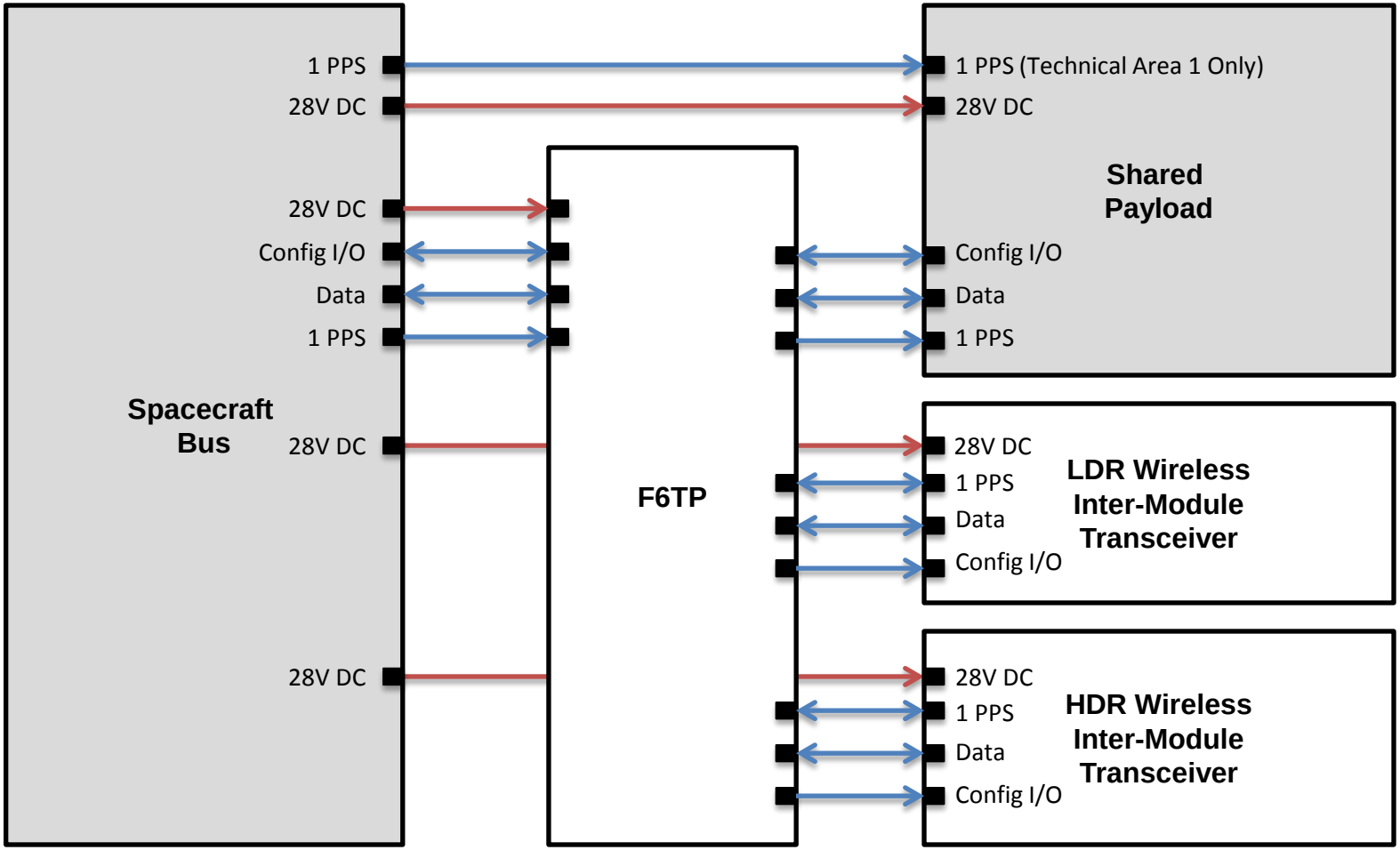

Shaded boxes represent components to be provided by proposers to this BAA

APPROVED FOR PUBLIC RELEASE. DISTRIBUTION UNLIMITED.

F6 Demo Spacecraft Bus Ground Segment Interfaces

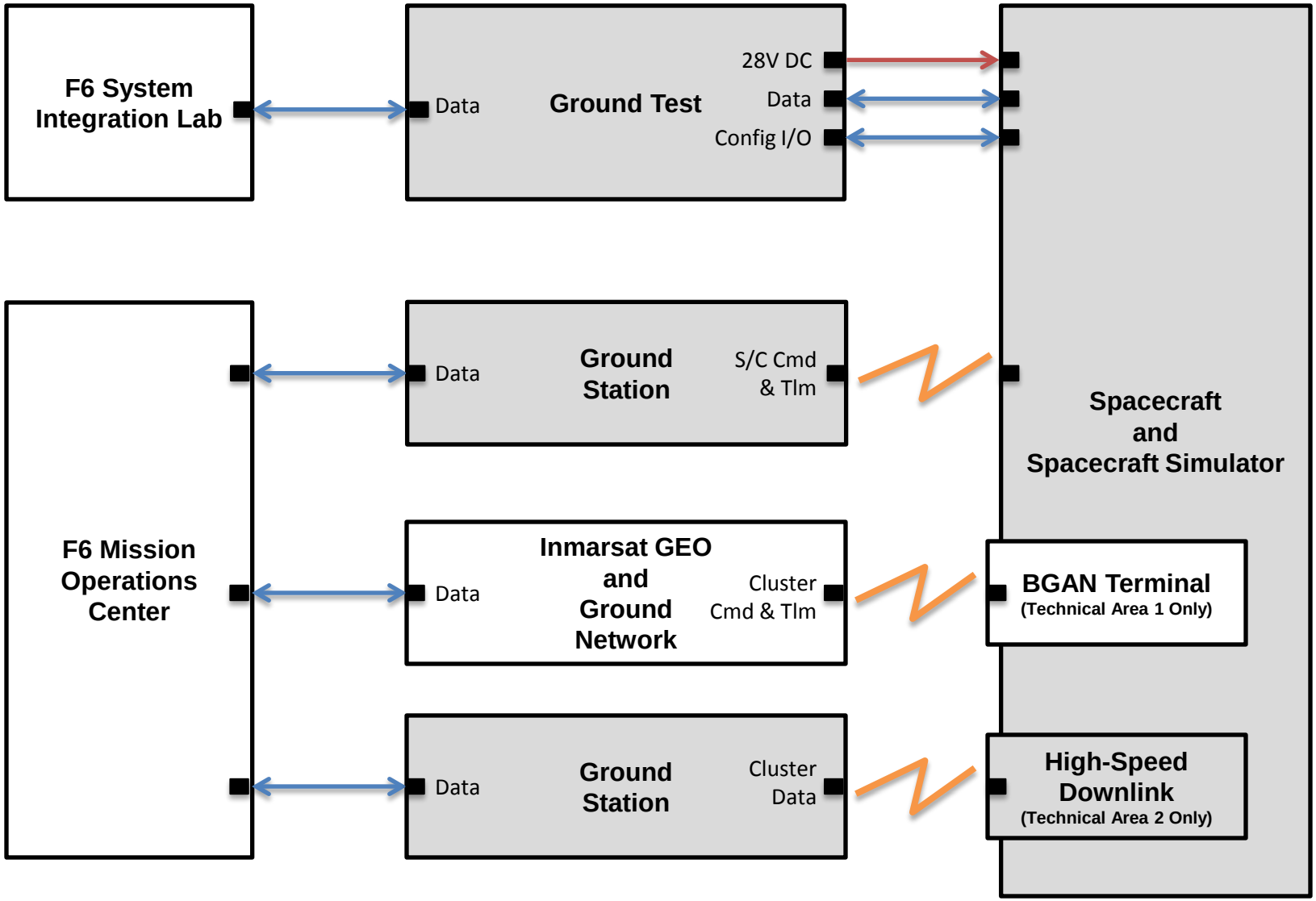

Shaded boxes represent components to be provided by proposers to this BAA

APPROVED FOR PUBLIC RELEASE. DISTRIBUTION UNLIMITED.

On-Orbit Demo Testbed Milestones and Deliverables (1)

- Module Interface Specifications (Award)
  - Module interface specifications (e.g. command and telemetry dictionary, hardware and software architecture diagrams, coordinate frames)
- Software-in-the-loop Demos (Award + 2 months, every 2 months)
  - Simulation/emulation of GN&C, C&DH, propulsion control, and payload/F6TP interfaces to support "faster than real-time" integration demos and System Integration Lab activities
- Hardware-in-the-loop Breadboards (No later than August 1, 2013)
  - Breadboard version of the spacecraft bus, precisely replicating the real-time behaviors of the GN&C, C&DH, propulsion control, and payload/F6TP interfaces
  - Breadboard of payload devices *applicable to technical areas 2 and 3 only*
- FDK Contributions (No later than August 1, 2013)
  - Contribution of device drivers and associated guidance and test materials to the FDK *applicable to technical areas 2 and 3 only*
  - FDK contributions to be provided with a license in accordance with the terms of a modified MIT/XFree86 license, a common, liberal, non- sticky open source license

APPROVED FOR PUBLIC RELEASE. DISTRIBUTION UNLIMITED.

On-Orbit Demo Testbed Milestones and Deliverables (2)

- Preliminary Design Review (Proposer determined)
  - Complete architectural design, top-level system layout
  - Substantiation of all key design trades, estimates of performance and objectives compliance, specification of all interfaces and dependencies, risk analysis, test/verification plan
- Critical Design Review (Proposer determined)
  - Complete detailed design, substantiation of any key design decisions since PDR
  - Complete released engineering drawings and models for the entire system
  - Detailed performance analysis with respect to all objectives, risk analysis, test/verification plan
- Module Integration and Acceptance Tests (Proposer determined)
  - Documentation substantiating evidence of verified and validated module interfaces, functional capabilities, and performance specification under maximum expected environmental conditions for all flight events, including transportation and handling
- Flight Readiness Review (Launch – 1 month)
  - Documentation and presentation substantiating evidence of flight readiness, mission and system safety

APPROVED FOR PUBLIC RELEASE. DISTRIBUTION UNLIMITED.

Additional Periodic Deliverables

- Program-wide PI meetings
  - Held bi-monthly in a major metropolitan area with easy access by air
  - Principal forum for delivery of performer results
  - Attended by all F6 performers including other testbed performers
- Monthly technical report
  - Delivered via SharePoint and email
  - Shared with all F6 performers
- Monthly financial and hours report
  - Delivered via SharePoint and email
  - Accessible by government team only
- Weekly informal teleconference of technical progress (30-45 minutes)
- Site visits
  - Informal visits and discussions with government team
  - 4-8 hours per visit, every 2 months

APPROVED FOR PUBLIC RELEASE. DISTRIBUTION UNLIMITED.

Intellectual Property and Data Handling

- IP rights
  - FDK contributions should be licensed in accordance with the terms of a modified MIT/XFree86 license
  - Breadboards, software simulation/emulation, and interface specification materials should be provided with sufficient usage rights to enable the System F6 Government Team and performer community to develop and execute an integrated capability for verification and validation purpose
  - All other deliverables except clearly identified previously developed IP should be provided with unlimited rights
- International Traffic in Arms Regulations (ITAR)
  - Must comply with ITAR and other export control statutes
  - FDK is not subject to export control restrictions as it is public domain information
- Pre-publication restrictions
  - Program is funded with “6.3” dollars—requiring pre-publication review
  - Exceptions (via “6.2” funding swaps) *may* be possible on a case-by-case basis

APPROVED FOR PUBLIC RELEASE. DISTRIBUTION UNLIMITED.

On-Orbit Demo Testbed Award Structure

- Proposers should propose an appropriate schedule of deliverables and milestones in their statement of work with dates indicated as relative values from a baseline launch date of April 1, 2015
  - That schedule should be congruent or constitute a superset of the minimal deliverables
  - The schedule should include support for 6-month demonstration mission

- All proposals MUST follow this structure

APPROVED FOR PUBLIC RELEASE. DISTRIBUTION UNLIMITED.

On-Orbit Demo Testbed Objectives

- Two groups of common objectives corresponding to minimal constraints:
  - Mission objectives
  - Functional objectives

- Additional objectives specific to each Technical Area

- A summary is provided in the the next set of slides; see draft BAA for complete definitions and additional clarification text

APPROVED FOR PUBLIC RELEASE. DISTRIBUTION UNLIMITED.

All Technical Areas: Mission Objectives

- MO1. Orbit: Each F6 demo spacecraft should be capable of operating in low-earth orbit (LEO) orbits ranging in altitude between 300 km and 1200 km at any inclination. Although the specific demo mission orbit has not been determined, proposers should assume a 600 km, circular, sun- synchronous orbit for sizing spacecraft components.

- MO2. Design Life: Each F6 demo spacecraft should support a minimum mission lifetime of 6 months, excluding time required for launch separation, initial checkout, and disposal.
  - MO2a: Radiation Tolerance: Each F6 demo spacecraft and associated electronics should be able to tolerate the expected radiation environment and mission duration and recover from transient errors due to radiation effects with minimal impact to the mission.
  - MO2b: Acceptance Tests: Proposers should clearly define the type, levels, and schedules of environmental acceptance tests to be provided.

- MO3: Launch Vehicle Compatibility: Each F6 demo spacecraft should be capable of being launched on a standard EELV Secondary Payload Adapter (ESPA).

APPROVED FOR PUBLIC RELEASE. DISTRIBUTION UNLIMITED.

All Technical Areas: Functional Objectives (1)

- FO1. Bus-F6TP Interface: Each F6 demo spacecraft bus should be able to host an F6TP.
  - The F6TP will be less than 3,000 cm3 in volume, with no dimension greater than 30 cm.
  - The F6TP mass will be less than 5 kg excluding external cabling.
  - The F6TP peak power consumption will be less than 30 W.
  - Each F6 demo spacecraft bus should interface with the F6TP via RS-422, SpaceWire, or Controller Area Network (CAN) data bus interface to exchange commands and telemetry (including but not limited to attitude, timing, navigation, propulsion, health and status, and acknowledgements).
  - Each F6 demo spacecraft bus should provide a 1 pulse-per-second (PPS) timing signal to the F6TP accurate to one part per million that can be distributed to peripherals for timing synchronization.
  - Each F6 demo spacecraft bus should provide at least 8 single-bit digital input/output signal lines to the F6TP for resets, power control, and other functions, and should require no more than 8 digital input signal lines from the F6TP to perform all required F6TP interactions.

APPROVED FOR PUBLIC RELEASE. DISTRIBUTION UNLIMITED.

All Technical Areas: Functional Objectives (2)

- FO2. Low Data Rate (LDR) Wireless Inter-Module Transceivers: Each spacecraft bus will have an LDR cross-link. There are currently two baseline designs for the LDR transceiver:
  - (1) a K- band transceiver with an internally-mounted enclosure measuring 19 cm x 27 cm x 9 cm and four (2 pairs) circularly polarized Radome antennas each measuring 3 cm x 3 cm x 2 cm, each pair mounted on opposite external panels of the spacecraft to provide near omni-directional coverage (the antennas are connected to the internal enclosure through waveguides);
  - (2) two S-band transceiver enclosures containing 5 patch element antennas and measuring 28 cm x 28 cm x 14 cm each that are mounted on opposite external panels of the spacecraft.
  - The maximal mass and power requirements to accommodate either of the LDR transceivers are 11 kg and 50 W respectively.

APPROVED FOR PUBLIC RELEASE. DISTRIBUTION UNLIMITED.

All Technical Areas: Functional Objectives (3)

- FO3. Power Distribution: Each F6 demo spacecraft bus should provide power distribution to the F6TP, transceivers, and F6 payload devices. The F6TP can command the power state of itself, the transceivers, and the F6 payload devices either through a direct digital I/O channel to the device or by issuing a command to the bus. The minimum power supply voltage is 28V +/- 6V DC. Power switching for all F6 devices should be activated through data interfaces with the F6TP and associated FDK applications.

- FO4. Thermal: Each F6 demo spacecraft should support thermal management of the F6TP, inter-module transceivers, and F6 payload devices through analyses during development and acceptance tests following spacecraft and payload integration. The expected operating temperature range for the F6TP and inter-module transceivers is between -40 to +85 degrees Celsius, and between -40 to +60 degrees Celsius respectively.

APPROVED FOR PUBLIC RELEASE. DISTRIBUTION UNLIMITED.

All Technical Areas: Functional Objectives (4)

- FO5. Electromagnetic Interference: Electromagnetic compatibility for all spacecraft bus and payload devices should be ensured through analyses during development and acceptance tests following spacecraft and payload integration. Only the K-band and S-band transceivers are applicable in every technical area. Additional electromagnetic susceptible components are defined by responses to this solicitation including potential GPS receivers, command and telemetry links, and high-speed downlink.

- FO6. Attitude Control: Each F6 demo spacecraft bus should be able to provide attitude knowledge information in all three axes accurate to within 1 degree (3σ) to the F6TP at least once per second; each F6 demo spacecraft bus should be able to maintain a stable attitude in all three axes to within 1 degree (3σ).

APPROVED FOR PUBLIC RELEASE. DISTRIBUTION UNLIMITED.

All Technical Areas: Functional Objectives (5)

- FO7. Cluster Flight: Each F6 demo spacecraft bus should be capable of participating in semi- autonomous cluster flight operations as commanded by the F6TP. Principally this requires the ability to accept high-level impulse command (ΔV vectors) and return telemetry and status information to the F6TP. Expected telemetry and status information should include orbital position information accurate to ≤10 m, 95% of time, orbital velocity information accurate to ≤0.15 m/s, 95% of time, spacecraft propellant levels, spacecraft mode and health information. Each spacecraft bus should have sufficient propellant for cluster maintenance for 6 months and subsequent de-orbit, estimated to be approximately 60 m/s ΔV.

- FO8. Scatter Maneuver: In order to meet the demonstration goal of a cluster scatter, defined as each spacecraft in the cluster leaving a 20 km threat box within 5 minutes of the issuance of a scatter command, each spacecraft bus must possess the ability to provide at least 40 N of thrust in one axis and possess 70 m/s ΔV for the scatter (and subsequent re-gather) maneuver.

APPROVED FOR PUBLIC RELEASE. DISTRIBUTION UNLIMITED.

All Technical Areas: Functional Objectives (6)

- FO9. Fault Management: Each F6 Spacecraft Module's fault management system should be capable of operating through the expected demo mission events such as periodic semi-autonomous maneuvers and scatter/re-gather demos without triggering a false positive response. The fault management system should interface with the F6TP and FDK software to be able to exchange health and status information at least once per second. In the event that a safe mode is triggered, the F6 demo spacecraft bus should alert the F6TP and FDK software and allow sufficient time for safing mission data.

APPROVED FOR PUBLIC RELEASE. DISTRIBUTION UNLIMITED.

All Technical Areas: Functional Objectives (7)

- FO10. Command & Telemetry and On-Orbit Support: Each F6 demo spacecraft bus should provide an independent commanding and telemetry capability throughout the expected duration of the mission that includes launch separation, initial checkout, mission operations including periods for anomaly investigations, and final disposal. Performers should provide these capabilities and services and price them accordingly in the proposal. There are no specific space-to-ground data rates, ground-pass windows, or personnel objectives specified beyond those routinely needed to support spacecraft bus operations. Command and telemetry links should be protected with cryptography generally commensurate with commercial best practices, an NSA Suite B implementation, or other NSA approved cryptographies.

- FO11. F6 Mission Operations Center: The proposed telemetry solution should be capable of exfiltrating telemetry and health data in near-real time over a secure virtual private network over the open Internet for purposes of interfacing with the F6 Mission Operations Center.

APPROVED FOR PUBLIC RELEASE. DISTRIBUTION UNLIMITED.

All Technical Areas: Functional Objectives (8)

- FO12. Integration and Test: Proposals should include standard integration and test services for integrating the F6TP, transceivers, and payloads with the spacecraft bus. Flight-qualified units of the low and high data-rate (LDR and HDR) transceivers are expected near the end of CY2013 while F6TP flight units are expected at the end of CY2014. Proposals should include software emulators of the spacecraft bus guidance, navigation, and control (GN&C) subsystem, the command and data handling (C&DH) system, and the propulsion subsystem for use by the Government and other System F6 program efforts. Proposals should also provide a breadboard version of the spacecraft bus, precisely replicating the real-time behaviors of the GN&C, C&DH, propulsion control, and payload/F6TP interfaces.

- FO13. Launch Integration Support: Proposed solutions should include support for standard launch vehicle integration and pre-launch verification activities.

APPROVED FOR PUBLIC RELEASE. DISTRIBUTION UNLIMITED.

Technical Area 1 SB-SAT: Objectives

- TA1.O1. SB-SAT Terminal: The F6 demo spacecraft bus in Technical Area 1 should host an SB- SAT terminal. The SB-SAT terminal is being developed independently, and will be furnished by the Government. The SB-SAT terminal requires an internally mounted enclosure measuring 27 cm x 19 cm x 11 cm. A two-axis articulated high-gain antenna should be mounted to a zenith- pointing external panel of the spacecraft. The antenna measures 32 cm x 32 cm x 35 cm. It must be steered in azimuth and elevation to +/- 90 degrees, thus accommodating 2π steradian coverage. The total mass and peak power requirements for the terminal are 10 kg and 45 W, respectively. The operating temperature is between -20°C to +60°C. The flight-qualified unit is expected in early CY2013.

- TA1.O2. Navigation and Timing: The F6 demo spacecraft bus in Technical Area 1 should support the navigation and timing requirements of the SB-SAT terminal. The F6 demo spacecraft bus in Technical Area 1 should provide position knowledge to ≤10 m, 95% of time, velocity knowledge to ≤0.05 m/s, 95% of time, and time knowledge to ≤500 ns, 95% of time to the F6TP. The F6 demo spacecraft bus should provide a 1 pulse per second output directly to the SB-SAT terminal accurate to one part per million.

APPROVED FOR PUBLIC RELEASE. DISTRIBUTION UNLIMITED.

Technical Area 2 High-Speed TX: Objectives (1)

- TA2.O1. Space-to-Ground Downlink: The F6 demo spacecraft bus in Technical Area 2 should provide a high-speed downlink transmitter with a minimum instantaneous data rate of 100 Mbps and associated ground station services. Proposers should clearly define the total achievable throughput per orbit and associated assumptions (e.g. frequencies, bandwidth, ground sites, ground-pass windows, elevation angles).

- TA2.O2. Data Exfiltration: The performer in Technical Area 2 should enable near-real time exfiltration of the downlinked data through a secure virtual private network over the open Internet.

APPROVED FOR PUBLIC RELEASE. DISTRIBUTION UNLIMITED.

Technical Area 2 High-Speed TX: Objectives (2)

- TA2.O3. Storage: The F6 demo spacecraft bus in Technical Area 2 should provide a high-capacity storage device.
  - TA2.O3a. Capacity: The storage device should provide a non-volatile data storage capability of at least 16 gigabytes.
  - TA2.O3b. Access: The storage device should be random access block-addressable for reading and writing, with a block size no greater than 4,096 bytes.
  - TA2.O3c. Error Handling: All errors in access to the storage device should be reflected to the FDK software and should not result in automatic block reassignment or reuse.
  - TA2.O3d: Erasure: The storage device should support a block-oriented erase capability, with a minimum block size no greater than 16 megabytes.
  - TA2.O3e: Storage Model: The storage device, including its supporting driver software executing on the F6TP, should provide a partitioned sharing model allowing the definition of at least 20 partitions with a size granularity no greater than 16 megabytes. The storage device should have no data interfaces to any system component except the F6TP, and should be controlled solely by the FDK software on the F6TP.

APPROVED FOR PUBLIC RELEASE. DISTRIBUTION UNLIMITED.

Technical Area 2 High-Speed TX: Objectives (3)

- TA2.O4. Payload-F6TP Interface: All logical interfaces to the downlink transmitter and storage device should be mediated through the F6TP.
  - The F6TP can accommodate SpaceWire, CAN, single-bit digital I/O signal lines (e.g., for resets, power control), and 1 PPS timing interfaces to these devices.
  - Since the F6TP is responsible for interfacing and controlling both devices, the performer should provide Linux-compatible device drivers to be executed on the F6TP that enable commanding and health/status monitoring of the downlink and data storage devices.
  - The device drivers, to include source code, executable, and documentation (e.g. guidance materials, test materials) should be included in the FDK and provided with the same open-source license.

APPROVED FOR PUBLIC RELEASE. DISTRIBUTION UNLIMITED.

Technical Area 2 High-Speed TX: Objectives (4)

- TA2.O5. On-Orbit Support: The performer in Technical Area 2 should provide on-orbit support for the high-speed downlink transmitter and storage device during mission operation with emphasis on initial orbit checkout and periods for anomaly investigations.

- TA2.O6. Integration and Test: The performer in Technical Area 2 should provide a breadboard version of the downlink transmitter and data storage device, precisely replicating the expected real-time behaviors and interfaces.

APPROVED FOR PUBLIC RELEASE. DISTRIBUTION UNLIMITED.

Technical Area 3 High-Speed Processor: Objectives (1)

- TA3.O1. HDR Transceiver: The F6 demo spacecraft bus in Technical Area 3 should host a High Data-Rate (HDR) wireless inter-module transceiver. The HDR transceiver operates at V-band and requires an internally mounted enclosure measuring 10 cm x 22 cm x 13 cm and an optically steered antenna (3 degrees beam width, 120 degrees field of regard) measuring 22 cm in diameter and 11 cm in height. The mass and power requirements for the HDR transceiver are 10 kg and 25 W respectively.

APPROVED FOR PUBLIC RELEASE. DISTRIBUTION UNLIMITED.

Technical Area 3 High-Speed Processor: Objectives (2)

- TA3.O2. High-Performance Computation: The F6 demo spacecraft bus in Technical Area 3 should provide a high-performance computing element, to be shared under control of the FDK software in the F6TP, with the following capabilities:
  - TA3.O2a: Performance: The computing element should provide at least 10,000 MIPS and 1,000 MFLOPS of computational capability.
  - TA3.O2b. Storage: The computing element should provide volatile data storage capability of at least 8 gigabytes.
  - TA3.O2c. Zeroization: All alterable states (e.g. memory, cache, registers, storage) within the computing element should be able to be rapidly cleared, in less than one second, following command from the F6TP.
  - TA3.O2d: Computation Model: The computing element should support a model of serial reusability, in which the entire computing resource is assigned to a single F6TP-resident application for a period of use.
  - TA3.O2e: Radiation Tolerance: The computing element should be able to tolerate and/or recover from errors due to radiation effects.
  - TA3.O2f. Innovative Architecture: The computing element should incorporate an innovative architecture that provides processing capabilities more effectively than traditional space-borne computers.

APPROVED FOR PUBLIC RELEASE. DISTRIBUTION UNLIMITED.

Technical Area 3 High-Speed Processor: Objectives (3)

- TA3.O3. Storage: The F6 demo spacecraft bus in Technical Area 3 should provide a high-capacity storage device.
  - TA3.O3a. Capacity: The storage device should provide a non-volatile data storage capability of at least 16 gigabytes.
  - TA3.O3b. Access: The storage device should be random access block-addressable for reading and writing, with a block size no greater than 4,096 bytes.
  - TA3.O3c. Error Handling: All errors in access to the storage device should be reflected to the FDK software and should not result in automatic block reassignment or reuse.
  - TA3.O3d: Erasure: The storage device should support a block-oriented erase capability, with a minimum block size no greater than 16 megabytes.
  - TA3.O3e: Storage Model: The storage device, including its supporting driver software executing on the F6TP, should provide a partitioned sharing model allowing the definition of at least 20 partitions with a size granularity no greater than 16 megabytes. The storage device should have no data interfaces to any system component except the F6TP, and should be controlled solely by the FDK software on the F6TP.

APPROVED FOR PUBLIC RELEASE. DISTRIBUTION UNLIMITED.

Technical Area 3 High-Speed Processor: Objectives (4)

- TA3.O4. Payload-F6TP Interface: All logical interfaces to the computing element and storage device should be mediated through the F6TP.
  - The F6TP can accommodate SpaceWire, CAN, single-bit digital I/O signal lines (e.g., for resets, power control), and 1 PPS timing interfaces to these devices.
  - Since the F6TP is responsible for interfacing and controlling both devices, the performer should provide Linux-compatible device drivers (and associated documentation) to be executed on the F6TP that enable commanding and health/status monitoring of the devices.
  - The device drivers, to include source code, executable, and documentation (e.g. guidance materials, test materials) should be included in the FDK and provided with the same open-source license.

APPROVED FOR PUBLIC RELEASE. DISTRIBUTION UNLIMITED.

Technical Area 3 High-Speed Processor: Objectives (5)

- TA3.O5. On-Orbit Support: The performer in Technical Area 3 should provide on-orbit support for the high-speed computing element and storage device during mission operation with emphasis on initial orbit checkout and periods for anomaly investigations.

- TA3.O6. Integration and Test: The performer in Technical Area 3 should provide a breadboard version of the computing element and data storage device, precisely replicating the expected real-time behaviors and interfaces.

APPROVED FOR PUBLIC RELEASE. DISTRIBUTION UNLIMITED.

Technical Area 4 Mission Payload: Objectives

- TA4.O1. HDR Transceiver: The F6 demo spacecraft bus in Technical Area 4 should host a High Data-Rate (HDR) wireless inter-module transceiver. The HDR transceiver operates at V-band and requires an internally mounted enclosure measuring 10 cm x 22 cm x 13 cm and an optically steered antenna (3 degrees beam width, 120 degrees field of regard) measuring 22 cm in diameter and 11 cm in height. The mass and power requirements for the HDR transceiver are 10 kg and 25 W respectively.

- TA4.O2. Third-Party Payload: The F6 demo spacecraft bus in Technical Area 4 should provide the capability to host a potential third-party payload. Size, weight, and power accommodations should be maximized to enable the widest potential application. Thermal, attitude, navigation, commanding and telemetry, and processing constraints should be defined. Multiple data bus options and associated data rates should be proposed. A notional schedule and critical path for integration and test with the third-party payload should be identified.

APPROVED FOR PUBLIC RELEASE. DISTRIBUTION UNLIMITED.

www.darpa.mil

APPROVED FOR PUBLIC RELEASE. DISTRIBUTION UNLIMITED.

Proposers' Day – agenda

Introduction and DARPA/TTO Overview	Maj John Losinski
DARPA BAA Process	Mr. Chris Glista
DARPA BAA Process Q&A	Mr. Chris Glista
System F6 Program Overview	Maj John Losinski
System F6 Demo Testbed Solicitation Details	Ms. Dawn McIntosh
System F6 Demo Testbed Solicitation Q&A	**Maj John Losinski**

APPROVED FOR PUBLIC RELEASE. DISTRIBUTION UNLIMITED.

System F6 On-Orbit Demo Testbed Draft BAA:

https://www.fbo.gov/spg/ODA/DARPA/CMO/DARPA-SN-12-39/listing.html

Direct Comments on Draft BAA to:

DARPA-BAA-12-32@darpa.mil

APPROVED FOR PUBLIC RELEASE. DISTRIBUTION UNLIMITED.